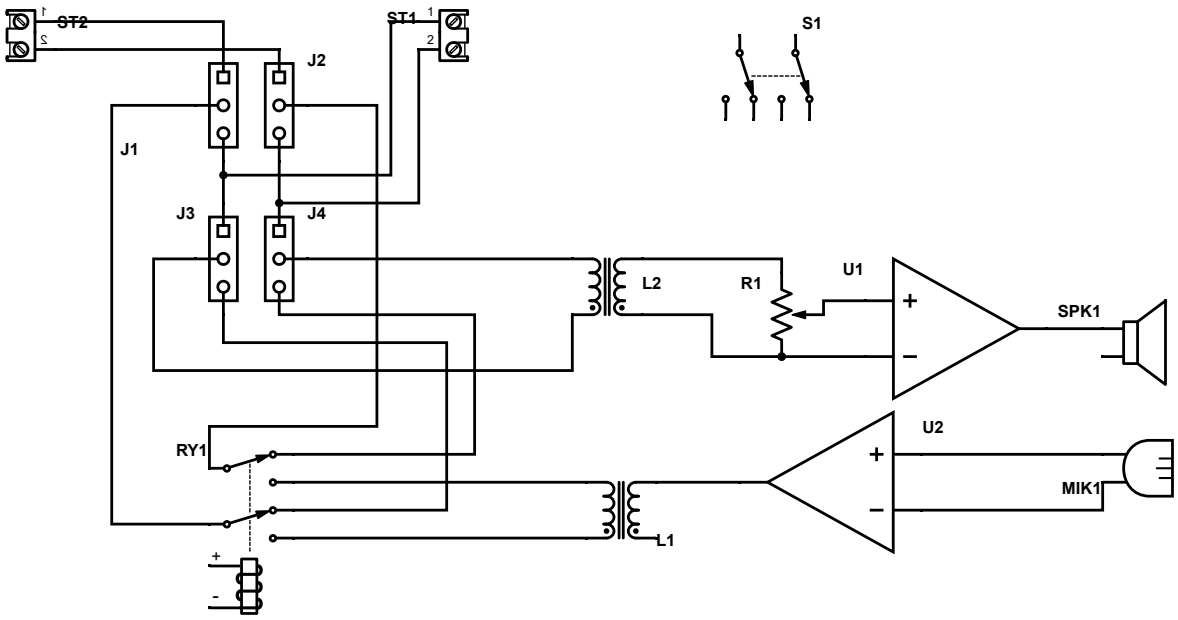
ST2
1
2
ST1
1
2
J2
J1
J3
J4
S1
L2
R1
U1
+
–
SPK1
U2
+
–
MIK1
RY1
L1
+
-