Enrico/Caruso 15" UMA Schematics Document
Sandy Bridge
Intel PCH
2011-06-02
REV : A00


```
DY :None Installed
PSL:10mW internal schematic
10mW: 10mW schematic installed
Surge: Surege schematic installed
GIGA: GIGA schematic installed
10/100: 10/100 schematic installed
HDMI: HDMI schematic installed
Debug: Debug schematic installed
```

DV15 HR Vos GIGA HDMI NoSurge

Wistron Corporation
21F, 88, Sec.1, Hsin Tai Wu Rd., Hsichih,
Taipei Hsien 221, Taiwan, R.O.C.

Title	Cover Page	
Size A3	Document Number Enrico/Caruso 15 HR	Rev X01
Date: Thursday, June 02, 2011	Sheet 1 of 104	

DV15 Huron River UMA Block Diagram

Project code : 91.4IP01.001
PCB P/N : 48.4IP16.0SB
Revision : 10316-1

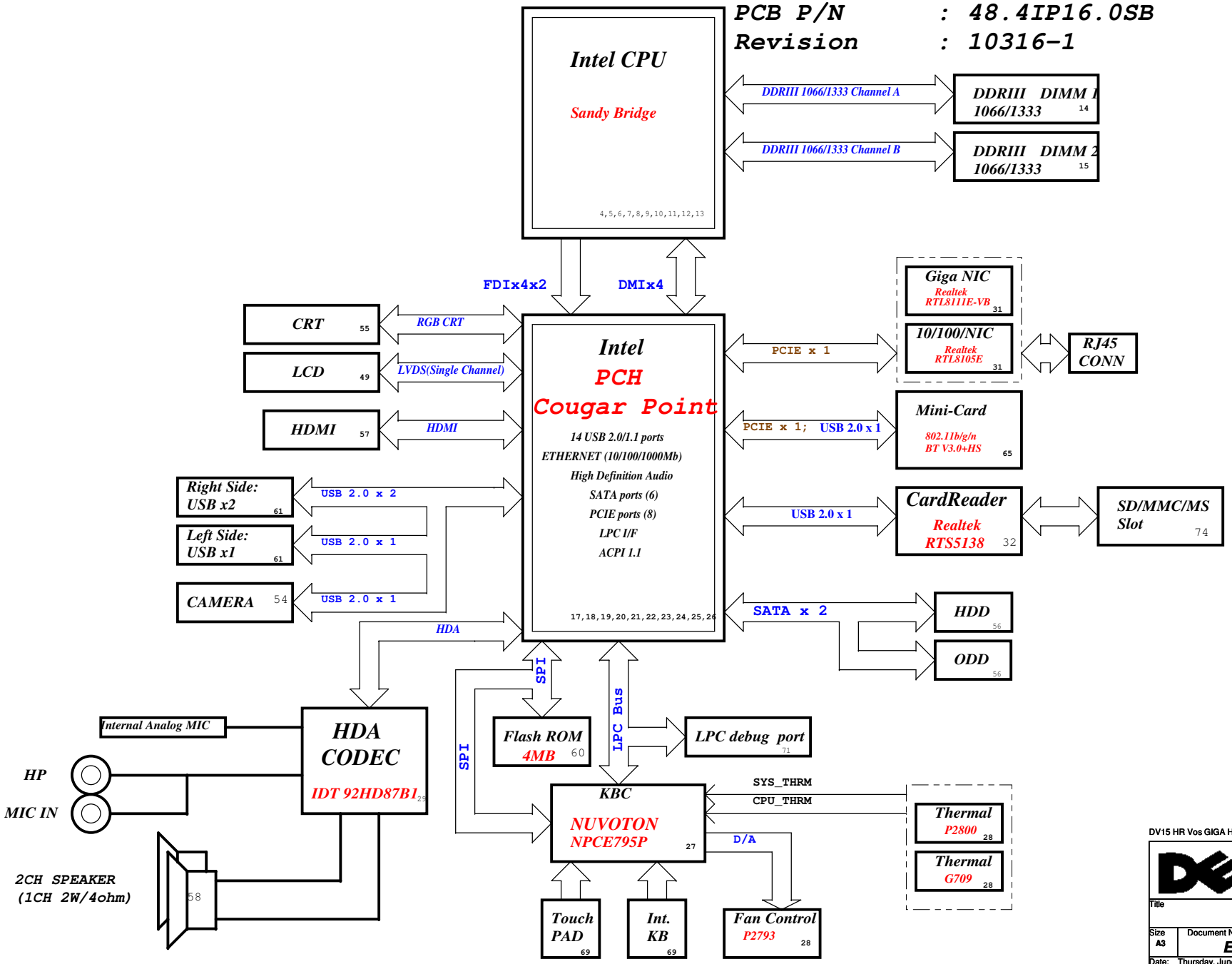

SYSTEM DC/DC TPS51461 48	
INPUTS	OUTPUTS
DCBATOUT	0D85V_S0

CPU DC/DC ISL95831HRTZ 42~44	
INPUTS	OUTPUTS
DCBATOUT	VCC_CORE

GFX DC/DC ISL95831HRTZ 44	
INPUTS	OUTPUTS
DCBATOUT	VCC_GFXCORE

SYSTEM DC/DC TPS51218 45	
INPUTS	OUTPUTS
DCBATOUT	1D05V_VTT

SYSTEM DC/DC TPS51123RGER 41	
INPUTS	OUTPUTS
DCBATOUT	5V_AUX_S5 3D3V_AUX_S5 5V_S5 3D3V_S5 15V_S5

SYSTEM DC/DC TPS51216RUKR 46	
INPUTS	OUTPUTS
DCBATOUT	1D5V_S3 0D75V_S0 DDR_VREF_S3

MAXIM CHARGER BQ24707 40	
INPUTS	OUTPUTS
+DC_IN_S5 +PBATT	DCBATOUT

SYSTEM DC/DC TPS51311RGTR 47	
INPUTS	OUTPUTS
3D3V_S5	1D8V_S0

Switches	
INPUTS	OUTPUTS
1D5V_S3 5V_S5 3D3V_S5	1D5V_S0 5V_S0 3D3V_S0

PCB LAYER	
L1:Top	L4:Signal
L2:GND	L5:VCC
L3:Signal	L6:Bottom

DV15 HR Vos GIGA HDMI NoSurge

Wistron Corporation
21F, 88, Sec.1, Hsin Tai Wu Rd., Hsichih, Taipei Hsien 221, Taiwan, R.O.C.

Title: Block Diagram

Size: A3 | Document Number: Enrico/Caruso 15 HR | Rev: X01

Date: Thursday, June 02, 2011 | Sheet 2 of 104

PCH Strapping

Name	Schematics Notes
SPKR	**Reboot option at power-up** **Default Mode:** Internal weak Pull-down. **No Reboot Mode with TCO Disabled:** Connect to Vcc3_3 with 8.2-kΩ - 10-kΩ weak pull-up resistor.
INIT3_3V#	Weak internal pull-up. Leave as "No Connect".
GNT3#/GPIO55 GNT2#/GPIO53 GNT1#/GPIO51	GNT[3:0]# functionality is not available on Mobile. Mobile: Used as GPIO only Pull-up resistors are not required on these signals. If pull-ups are used, they should be tied to the Vcc3_3power rail.
SPI_MOSI	**Enable Danbury:** Connect to Vcc3_3 with 8.2-k? weak pull-up resistor. **Disable Danbury:** Left floating, no pull-down required.
NV_ALE	**Enable Danbury:** Connect to +NVRAM_VCCQ with 8.2-kohm weak pull-up resistor [CRB has it pulled up with 1-kohm no-stuff resistor] **Disable Danbury:** Leave floating (internal pull-down)
NC_CLE	DMI termination voltage. Weak internal pull-up. Do not pull low.
HAD_DOCK_EN# /GPIO[33]	Low (0) - Flash Descriptor Security will be overridden. Also, when this signals is sampled on the rising edge of PWROK then it will also disable Intel ME and its features. High (1) - Security measure defined in the Flash Descriptor will be enabled. Platform design should provide appropriate pull-up or pull-down depending on the desired settings. If a jumper option is used to tie this signal to GND as required by the functional strap, the signal should be pulled low through a weak pull-down in order to avoid asserting HDA_DOCK_EN# inadvertently. Note: CRB recommends 1-kohm pull-down for FD Override. There is an internal pull-up of 20 kohm for DA_DOCK_EN# which is only enabled at boot/reset for strapping functions.
HDA_SDO	Weak internal pull-down. Do not pull high. Sampled at rising edge of RSMRST#.
HDA_SYNC	Weak internal pull-down. Do not pull high. Sampled at rising edge of RSMRST#.
GPIO15	Low (1) - Intel ME Crypto Transport Layer Security (TLS) cipher suite with no confidentiality High (1) - Intel ME Crypto Transport Layer Security (TLS) cipher suite with confidentiality Note : This is an un-muxed signal. This signal has a weak internal pull-down of 20 kohm which is enabled when PWROK is low. Sampled at rising edge of RSMRST#. CRB has a 1-kohm pull-up on this signal to +3.3VA rail.
GPIO8	GPIO8 on PCH is the Integrated Clock Enable strap and is required to be pulled-down using a 1k +/- 5% resistor. When this signal is sampled high at the rising edge of RSMRST#, Integrated Clocking is enabled, When sampled low, Buffer Through Mode is enabled.
GPIO27	**Default = Do not connect (floating)** High(1) = Enables the internal VccVRM to have a clean supply for analog rails. No need to use on-board filter circuit. Low (0) = Disables the VccVRM. Need to use on-board filter circuits for analog rails.

Huron River Schematic Checklist Rev.0_7

Pin Name	Strap Description	Configuration (Default value for each bit is 1 unless specified otherwise)	Default Value
CFG[2]	**PCI-Express Static Lane Reversal**	**1:** Normal Operation. **0:** Lane Numbers Reversed 15 -> 0, 14 -> 1, ...	1
CFG[4]		**1:** Disabled - No Physical Display Port attached to Embedded DisplayPort. **0:** Enabled - An external Display Port device is connectd to the EMBEDDED display Port	0
CFG[6:5]	**PCI-Express Port Bifurcation Straps**	11 : x16 - Device 1 functions 1 and 2 disabled 10 : x8, x8 - Device 1 function 1 enabled ; function 2 disabled 01 : Reserved - (Device 1 function 1 disabled ; function 2 enabled) 00 : x8, x4, x4 - Device 1 functions 1 and 2 enabled	11
CFG[7]	**PEG DEFER TRAINING**	**1:** PEG Train immediately following xxRESETB de assertion **0:** PEG Wait for BIOS for training	1

Voltage Rails

POWER PLANE	VOLTAGE	ACTIVE IN	DESCRIPTION
5V_S0 3D3V_S0 1D8V_S0 1D5V_S0 1D05V_VTT 0D85V_S0 0D75V_S0 VCC_CORE VCC_GFXCORE	5V 3.3V 1.8V 1.5V 1.05V 0.95 - 0.85V 0.75V 0.35V to 1.5V 0.4 to 1.25V	S0	CPU Core Rail Graphics Core Rail
5V_USBX_S3 1D5V_S3 DDR_VREF_S3	5V 1.5V 0.75V	S3	
BT+ DCBATOUT 5V_S5 5V_AUX_S5 3D3V_S5 3D3V_AUX_S5	9V-12.6V 9V-19V 5V 5V 3.3V 3.3V	All S states	AC Brick Mode only
3D3V_LAN_S5	3.3V	WOL_EN	Legacy WOL
3D3V_AUX_KBC	3.3V	DSW, Sx	ON for supporting Deep Sleep states
3D3V_AUX_S5	3.3V	G3, Sx	Powered by Li Coin Cell in G3 and +V3ALW in Sx

PCIE Routing

LANE1	X
LANE2	Onboard LAN
LANE3	x
LANE4	Mini Card1(WLAN)
LANE5	X
LANE6	X
LANE7	X
LANE8	X

SATA Table

SATA	
Pair	Device
0	HDD1
1	X
2	X
3	X
4	ODD1
5	X

USB Table

Pair	Device
0	X
1	USB Ext. port 1
2	X
3	X
4	X
5	CARD READER
6	X
7	X
8	USB Ext. port 2
9	USB Ext. port 3
10	X
11	Mini Card1 (WLAN)
12	CAMERA
13	X

SMBus ADDRESSES

I² C / SMBus Addresses Device	Ref Des	HURON RIVER ORB Address Hex Bus
EC SMBus 1 Battery CHARGER		BAT_SCL/BAT_SDA BAT_SCL/BAT_SDA BAT_SCL/BAT_SDA
EC SMBus 2 PCH		SML1_CLK/SML1_DATA SML1_CLK/SML1_DATA
PCH SMBus SO-DIMMA (SPD) SO-DIMMB (SPD) MINI		PCH_SMBDATA/PCH_SMBCLK PCH_SMBDATA/PCH_SMBCLK PCH_SMBDATA/PCH_SMBCLK PCH_SMBDATA/PCH_SMBCLK

DV15 HR Vos GIGA HDMI NoSurge

Wistron Corporation
21F, 88, Sec.1, Hsin Tai Wu Rd., Hsichih,
Taipei Hsien 221, Taiwan, R.O.C.

Title: Table of Content

Size	Document Number	Rev
A3	Enrico/Caruso 15 HR	X01

Date: Thursday, June 02, 2011 Sheet 3 of 104

SSID = CPU

Signal Routing Guideline:
PEG_ICOMPO keep W/S=12/15 mils and routing length less than 500 mils.
PEG_ICOMPI & PEG_RCOMPO keep W/S=4/15 mils and routing length less than 500 mils.

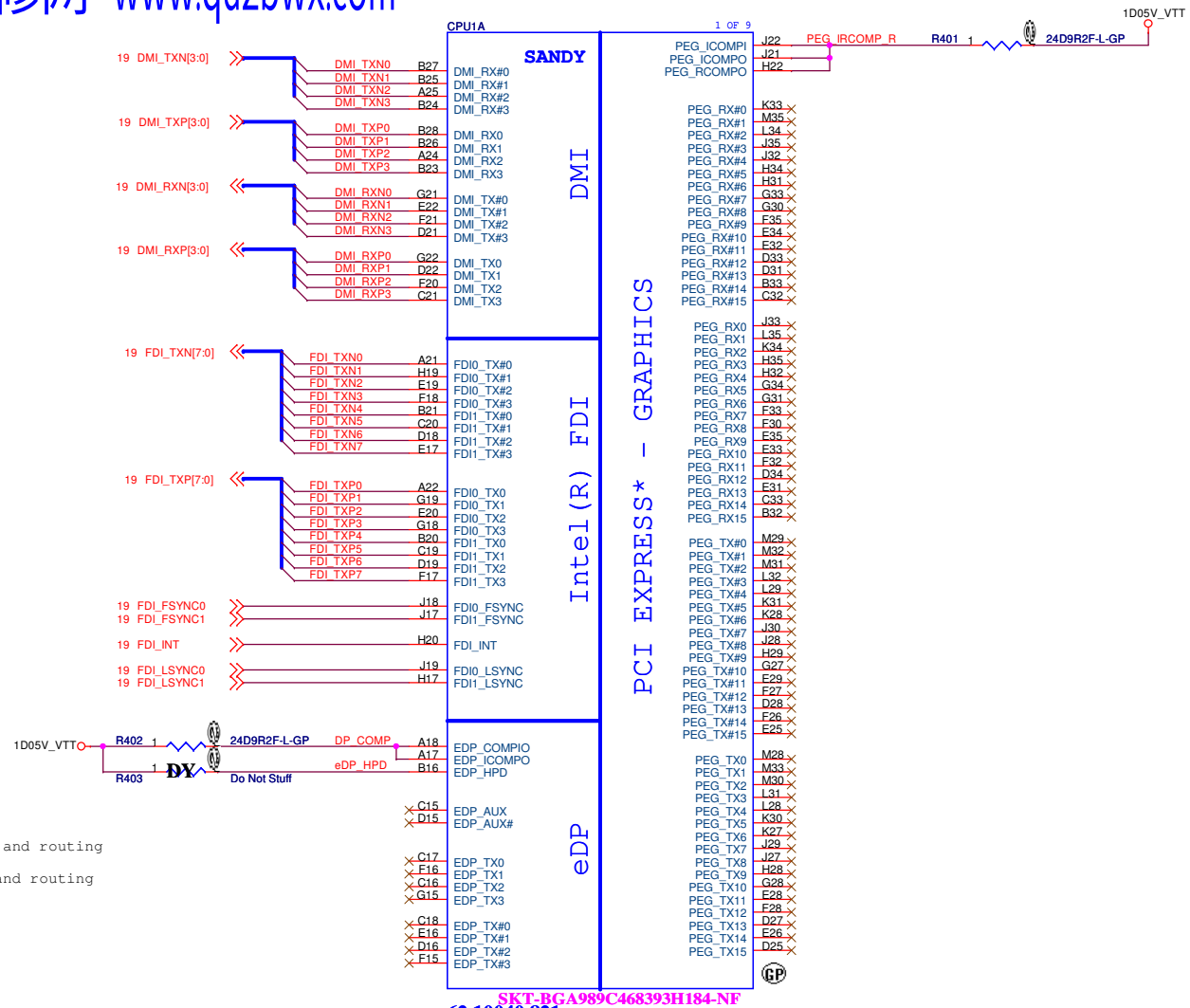

Signal Routing Guideline:
EDP_ICOMPO keep W/S=12/15 mils and routing length less than 500 mils.
EDP_COMPIO keep W/S=4/15 mils and routing length less than 500 mils.

DV15 HR Vos GIGA HDMI NoSurge

DELL	Wistron Corporation 21F, 88, Sec.1, Hsin Tai Wu Rd., Hsichih, Taipei Hsien 221, Taiwan, R.O.C.	
Title	CPU (PCIE/DMI/FDI)	
Size A3	Document Number Enrico/Caruso 15 HR	Rev X01
Date: Thursday, June 02, 2011	Sheet 4 of 104	

SSID = CPU

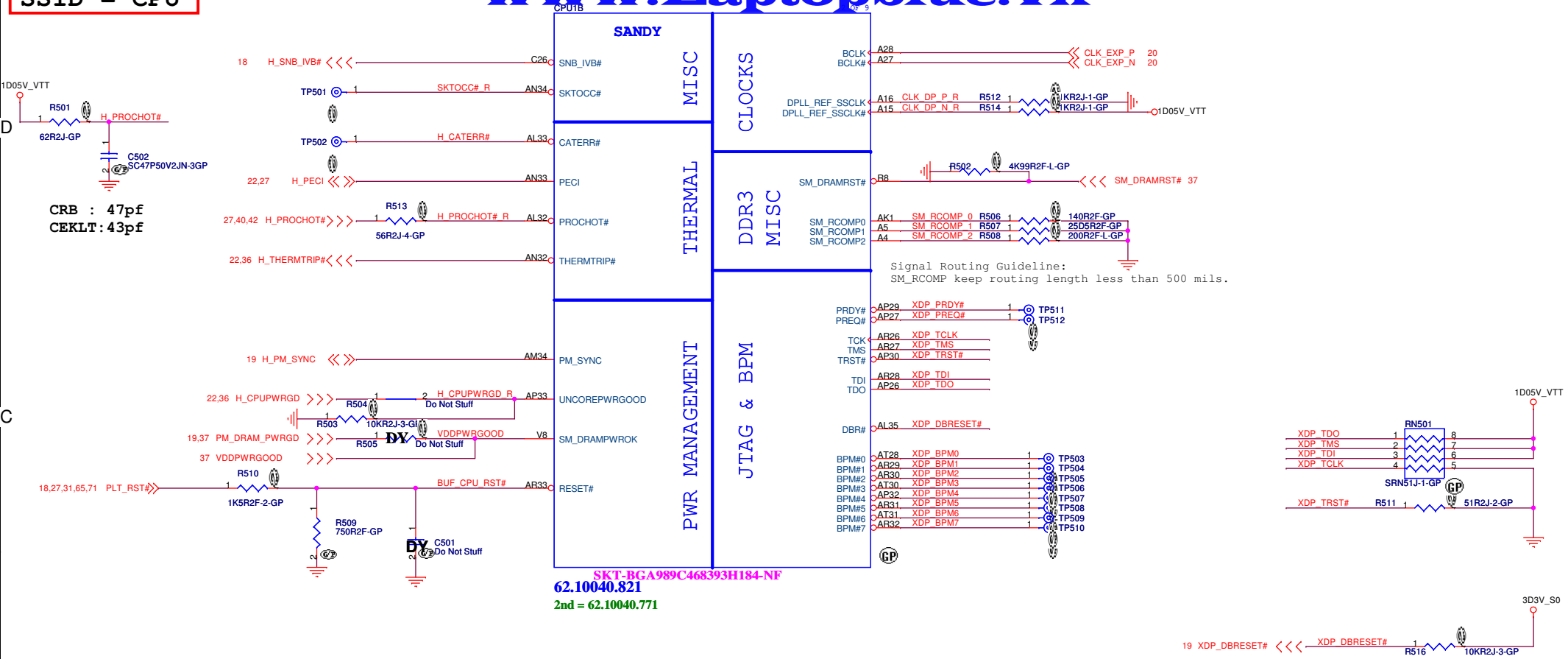

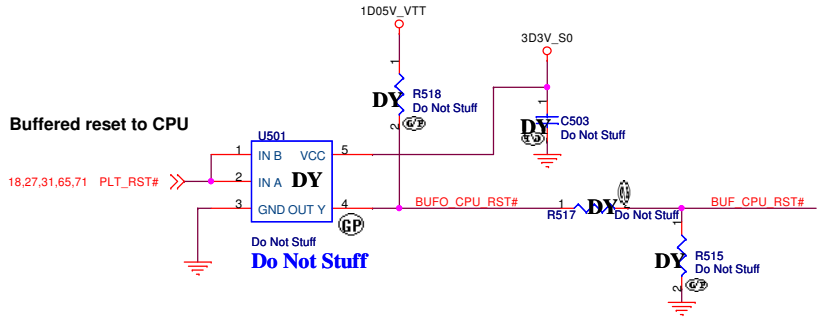

DV15 HR Vos GIGA HDMI NoSurge

Wistron Corporation
21F, 88, Sec.1, Hsin Tai Wu Rd., Hsichih,
Taipei Hsien 221, Taiwan, R.O.C.

Title: CPU (THERMAL/CLOCK/PM)

Size: A3 | Document Number: Enrico/Caruso 15 HR | Rev: X01

Date: Thursday, June 02, 2011 | Sheet 5 of 104

SSID = CPU

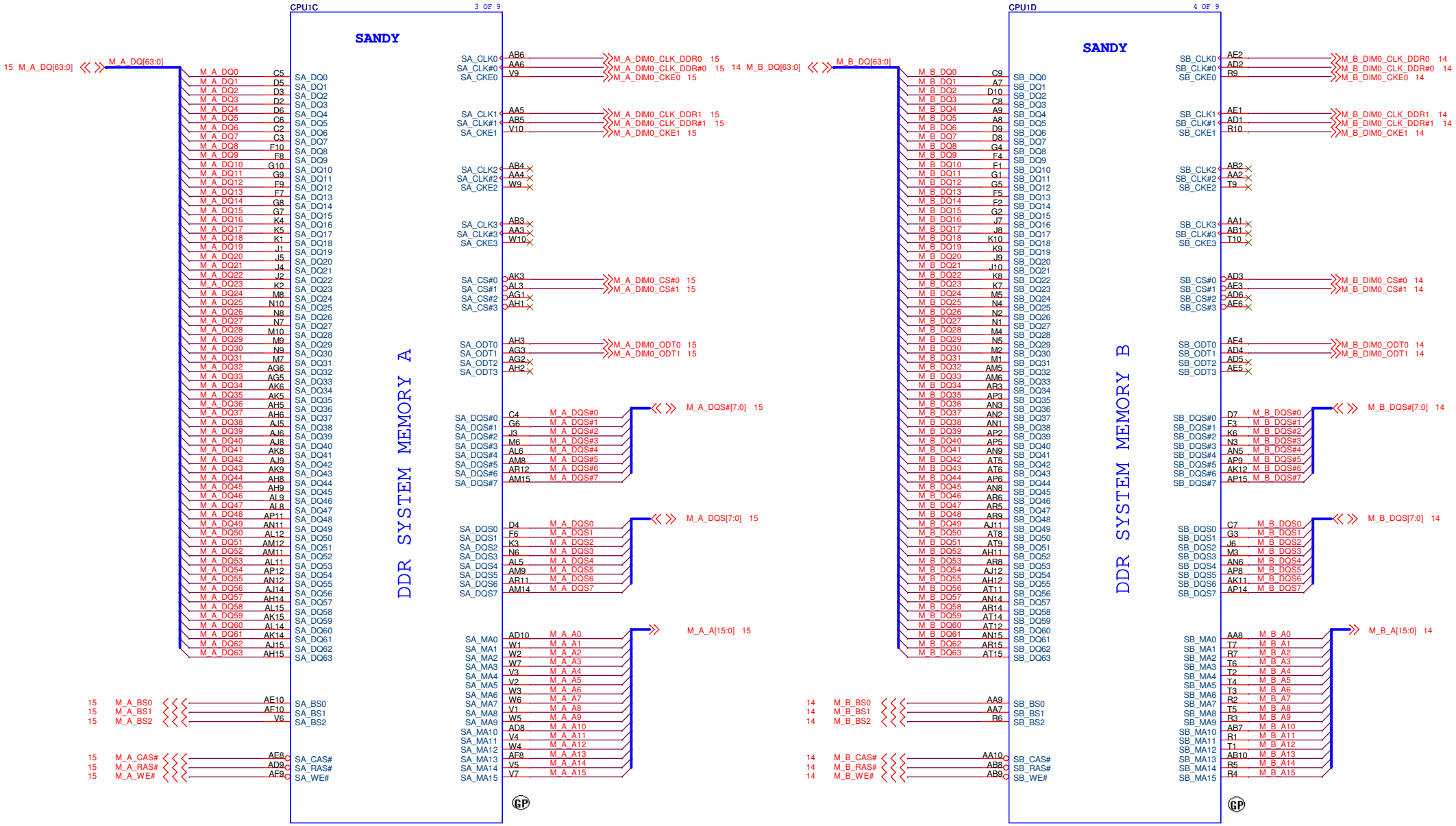

DV15 HR Vos GIGA HDMI NoSurge

Wistron Corporation
21F, 88, Sec.1, Hsin Tai Wu Rd., Hsichih,
Taipei Hsien 221, Taiwan, R.O.C.

Title: CPU (DDR)

Size: A3 | Document Number: Enrico/Caruso 15 HR | Rev: X01

Date: Thursday, June 02, 2011 | Sheet 6 of 104

SSID = CPU

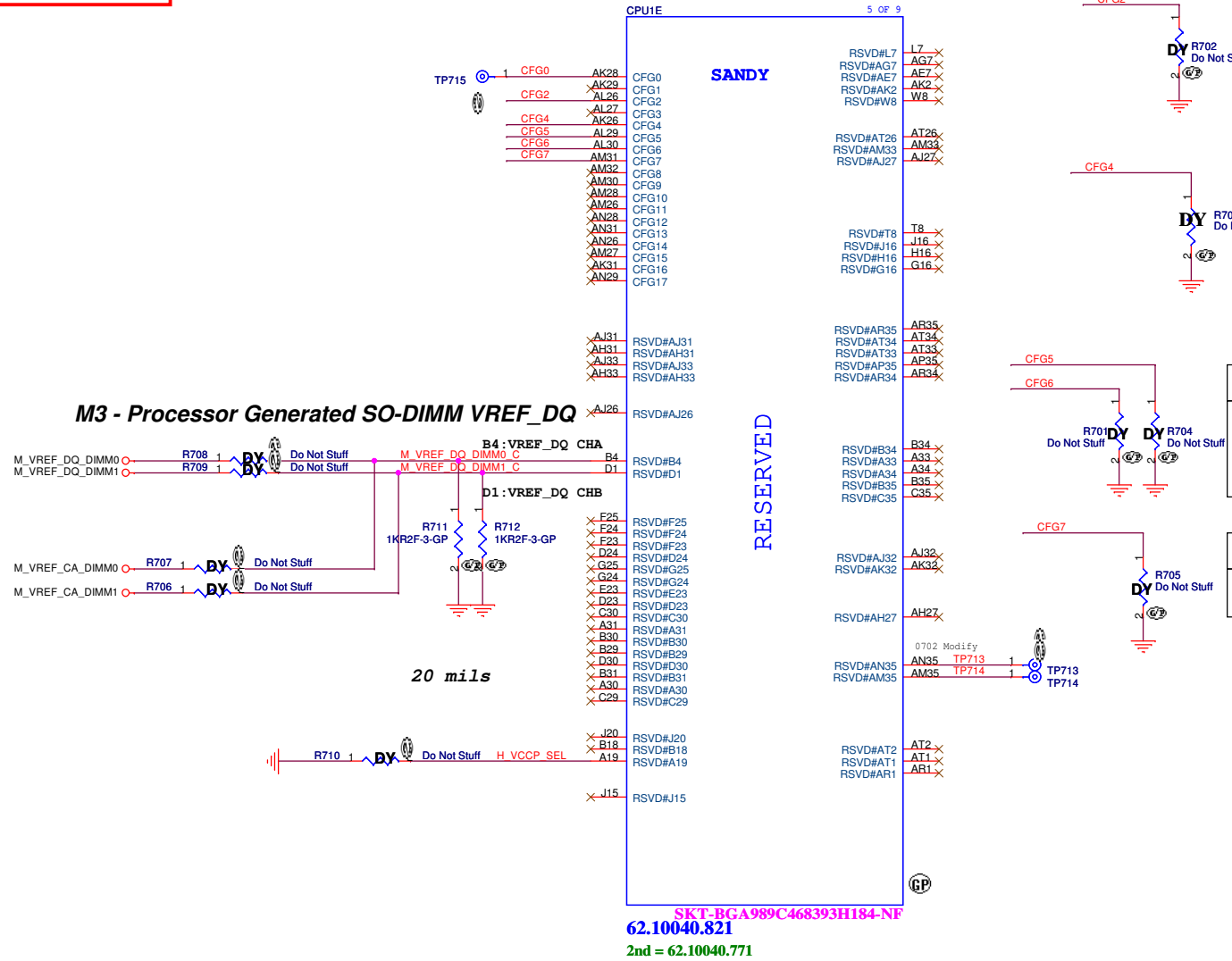

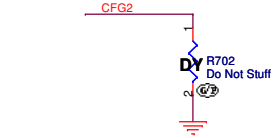

PEG Static Lane Reversal	
CFG2	1: Normal Operation; Lane # definition matches socket pin map definition
	0:Lane Reversed

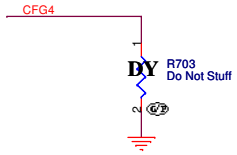

Display Port Presence Strap	
CFG4	1: Disabled; No Physical Display Port attached to Embedded Display Port
	0: Enabled; An external Display Port device is connected to the Embedded Display Port

PCIE Port Bifurcation Straps	
CFG[6:5]	11: x16 - Device 1 functions 1 and 2 disabled
	10: x8, x8 - Device 1 function 1 enabled ; function 2 disabled
	01: Reserved - (Device 1 function 1 disabled ; function 2 enabled)
	00: x8,x4,x4 - Device 1 functions 1 and 2 enabled

PEG DEFER TRAINING	
CFG7	1: PEG Train immediately following xxRESETB de assertion
	0: PEG Wait for BIOS for training

DV15 HR Vos GIGA HDMI NoSurge

Wistron Corporation
21F, 88, Sec.1, Hsin Tai Wu Rd., Hsichih,
Taipei Hsien 221, Taiwan, R.O.C.

Title: CPU (RESERVED)

Size: A3 | Document Number: Enrico/Caruso 15 HR | Rev: X01

Date: Thursday, June 02, 2011 | Sheet 7 of 104

SSID = CPU

POWER

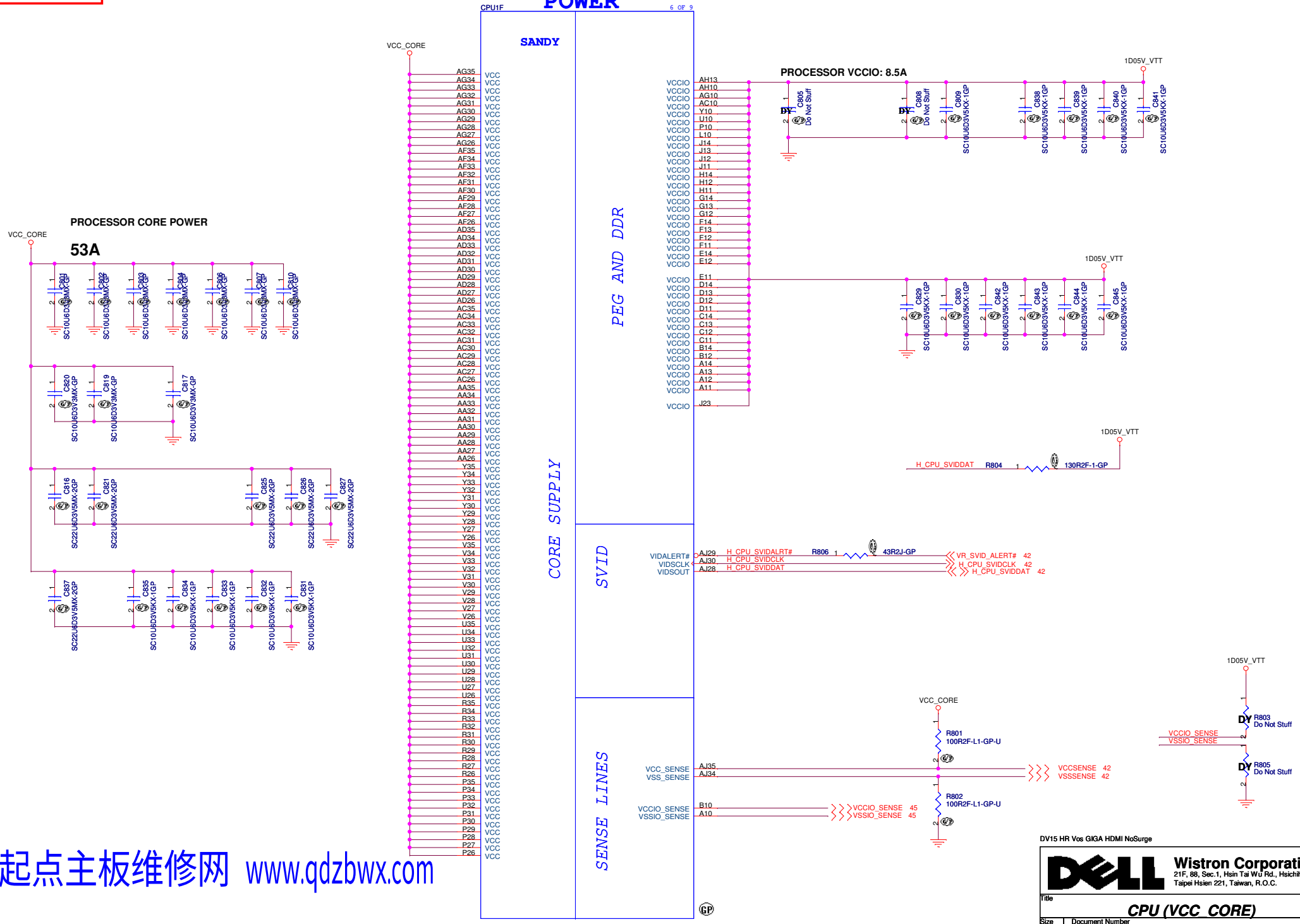

62.10040.821
2nd = 62.10040.771

DV15 HR Vos GIGA HDMI NoSurge

Wistron Corporation
21F, 88, Sec.1, Hsin Tai Wu Rd., Hsichih,
Taipei Hsien 221, Taiwan, R.O.C.

Title: CPU (VCC_CORE)

Size: Custom | Document Number: Enrico/Caruso 15 HR | Rev: X01

Date: Thursday, June 02, 2011 | Sheet 8 of 104

SSID = CPU

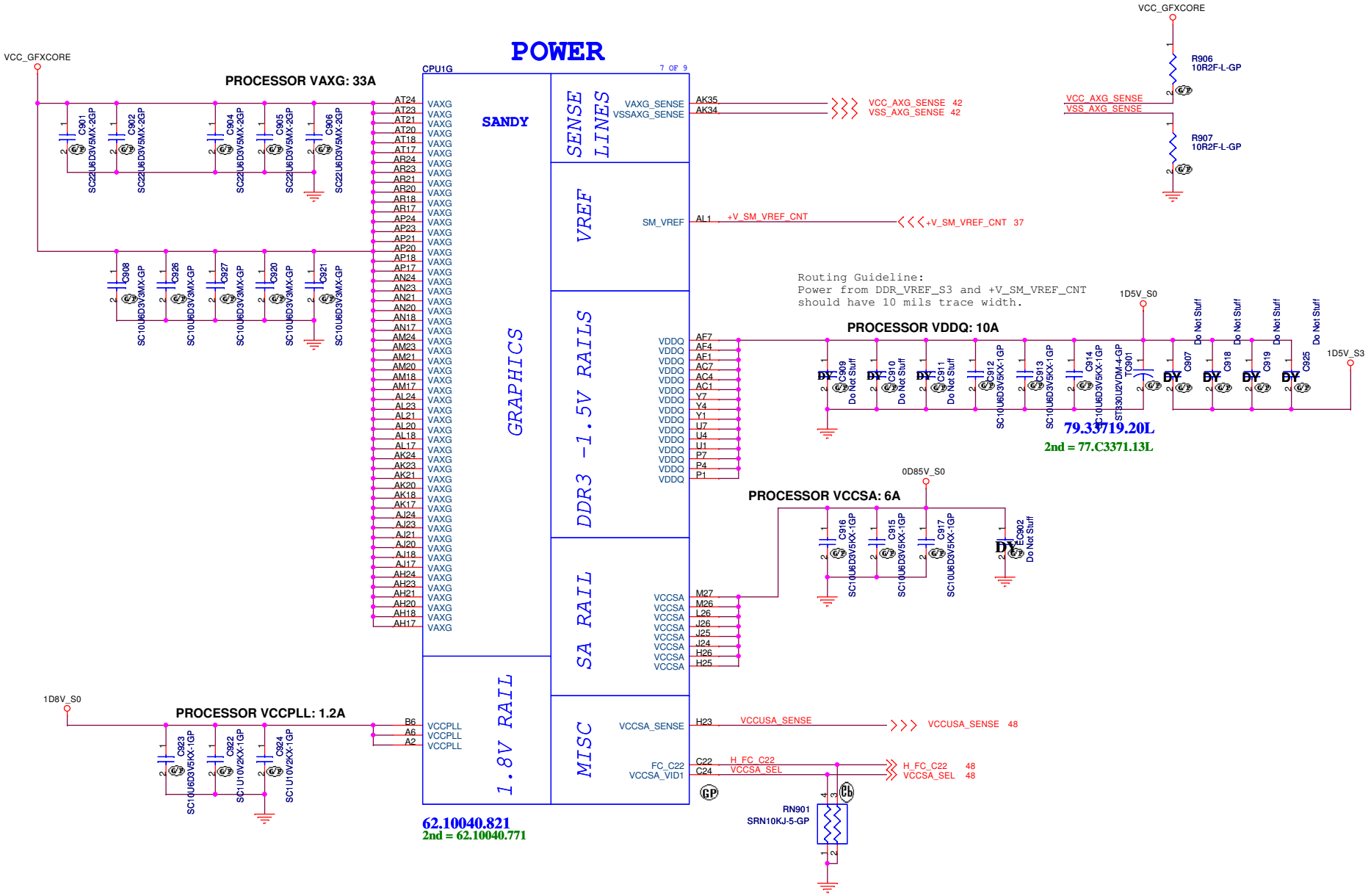

DV15 HR Vos GIGA HDMI NoSurge

Wistron Corporation
21F, 88, Sec.1, Hsin Tai Wu Rd., Hsichih,
Taipei Hsien 221, Taiwan, R.O.C.

Title: CPU (VCC_GFXCORE)

Size: A3 | Document Number: Enrico/Caruso 15 HR | Rev: X01

Date: Thursday, June 02, 2011 | Sheet 9 of 104

SSID = CPU

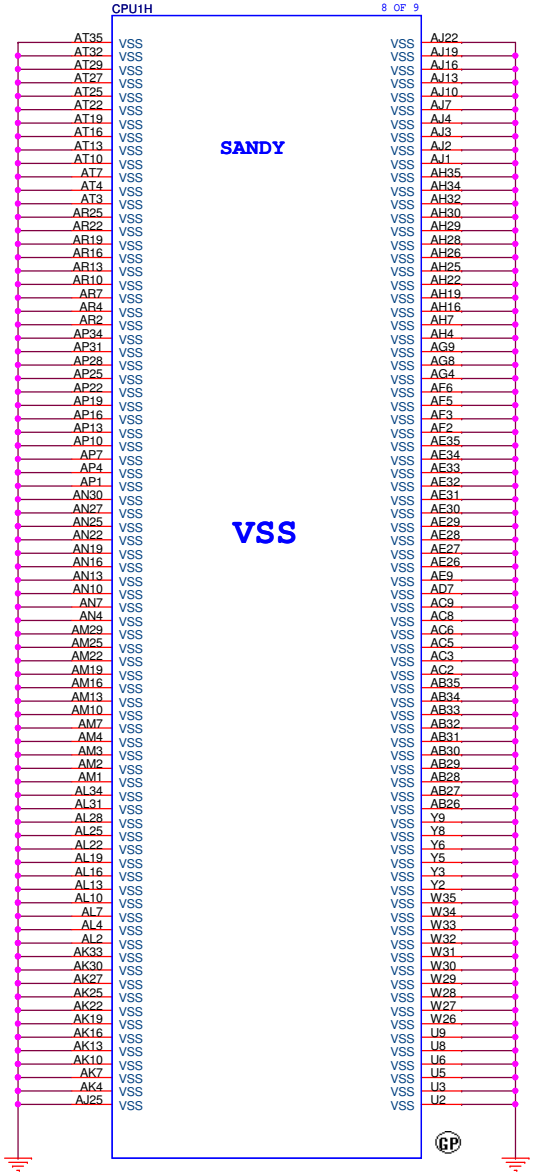

62.10040.821

2nd = 62.10040.771

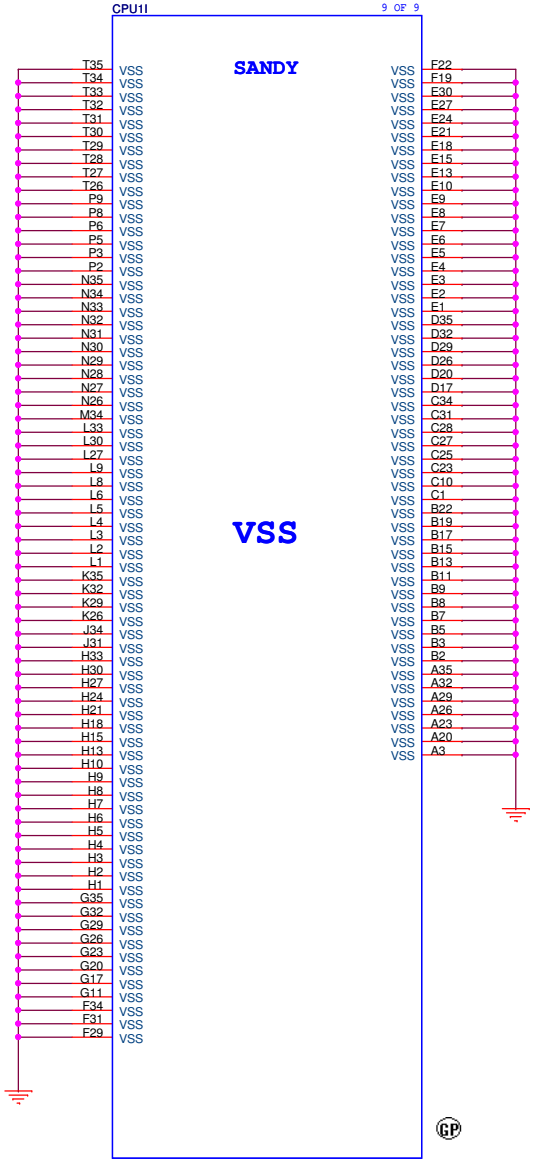

62.10040.821

2nd = 62.10040.771

DV15 HR Vos GIGA HDMI NoSurge

Wistron Corporation
21F, 88, Sec.1, Hsin Tai Wu Rd., Hsichih,
Taipei Hsien 221, Taiwan, R.O.C.

Title: CPU (VSS)

Size: A3 | Document Number: Enrico/Caruso 15 HR | Rev: X01

Date: Thursday, June 02, 2011 | Sheet 10 of 104

(Blanking)

DV15 HR Vos GIGA HDMI NoSurge

Wistron Corporation
21F, 88, Sec.1, Hsin Tai Wu Rd., Hsichih,
Taipei Hsien 221, Taiwan, R.O.C.

Title	XDP	
Size A3	Document Number Enrico/Caruso 15 HR	Rev X01
Date: Thursday, June 02, 2011	Sheet 11 of 104	

(Blanking)

DV15 HR Vos GIGA HDMI NoSurge

Wistron Corporation
21F, 88, Sec.1, Hsin Tai Wu Rd., Hsichih,
Taipei Hsien 221, Taiwan, R.O.C.

Title: Reserved

Size: A3 | Document Number: Enrico/Caruso 15 HR | Rev: X01

Date: Thursday, June 02, 2011 | Sheet 12 of 104

(Blanking)

DV15 HR Vos GIGA HDMI NoSurge

Wistron Corporation
21F, 88, Sec.1, Hsin Tai Wu Rd., Hsichih,
Taipei Hsien 221, Taiwan, R.O.C.

Title: Reserved

Size: A3 | Document Number: Enrico/Caruso 15 HR | Rev: X01

Date: Thursday, June 02, 2011 | Sheet 13 of 104

SSID = MEMORY

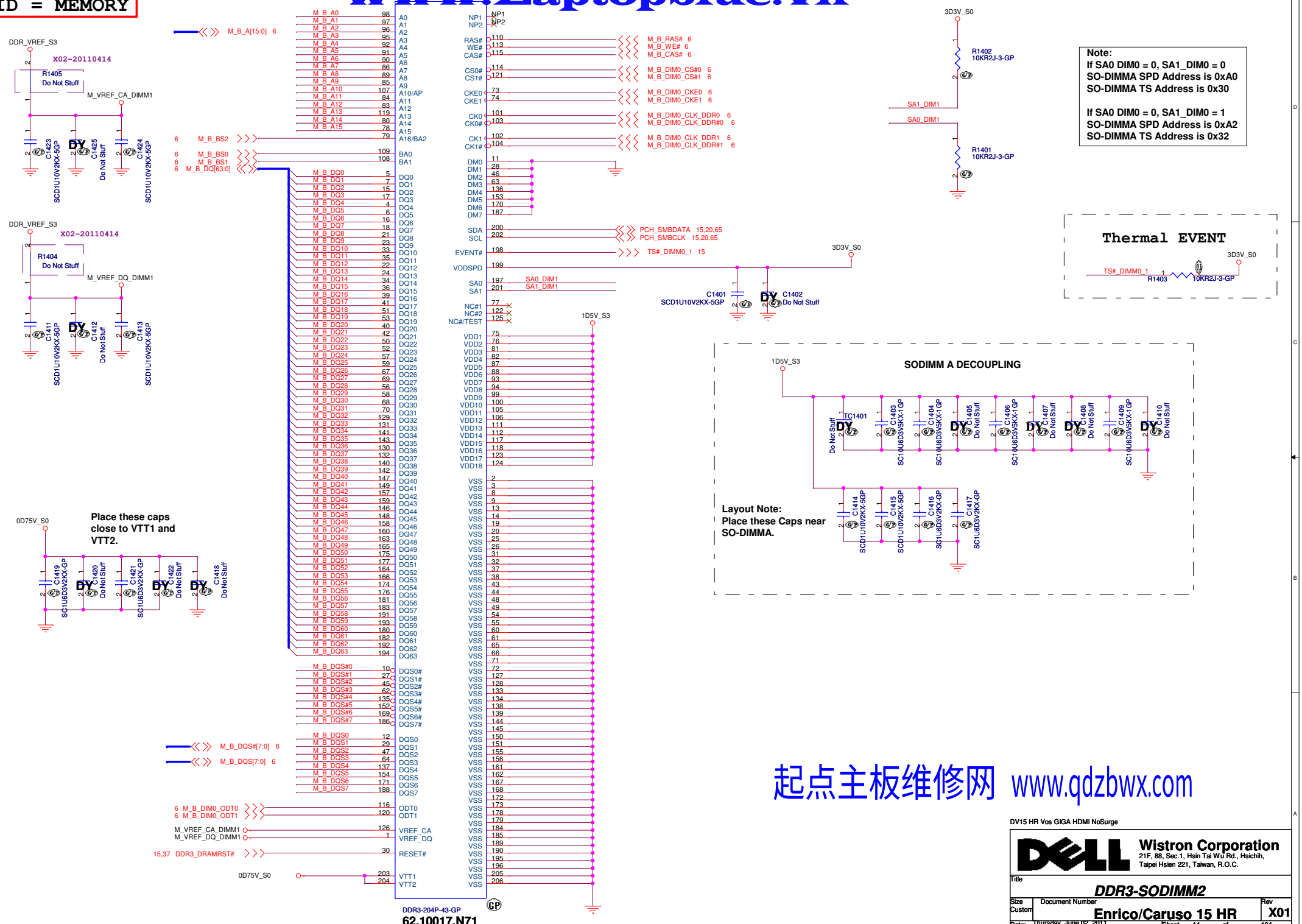

Note:
If SA0 DIM0 = 0, SA1_DIM0 = 0
SO-DIMMA SPD Address is 0xA0
SO-DIMMA TS Address is 0x30

If SA0 DIM0 = 0, SA1_DIM0 = 1
SO-DIMMA SPD Address is 0xA2
SO-DIMMA TS Address is 0x32

DV15 HR Vos GIGA HDMI NoSurge

Wistron Corporation
21F, 88, Sec.1, Hsin Tai Wu Rd., Hsichih,
Taipei Hsien 221, Taiwan, R.O.C.

Title: **DDR3-SODIMM2**

Size	Document Number	Rev
Custom	Enrico/Caruso 15 HR	X01

Date: Thursday, June 02, 2011 Sheet 14 of 104

SSID = MEMORY

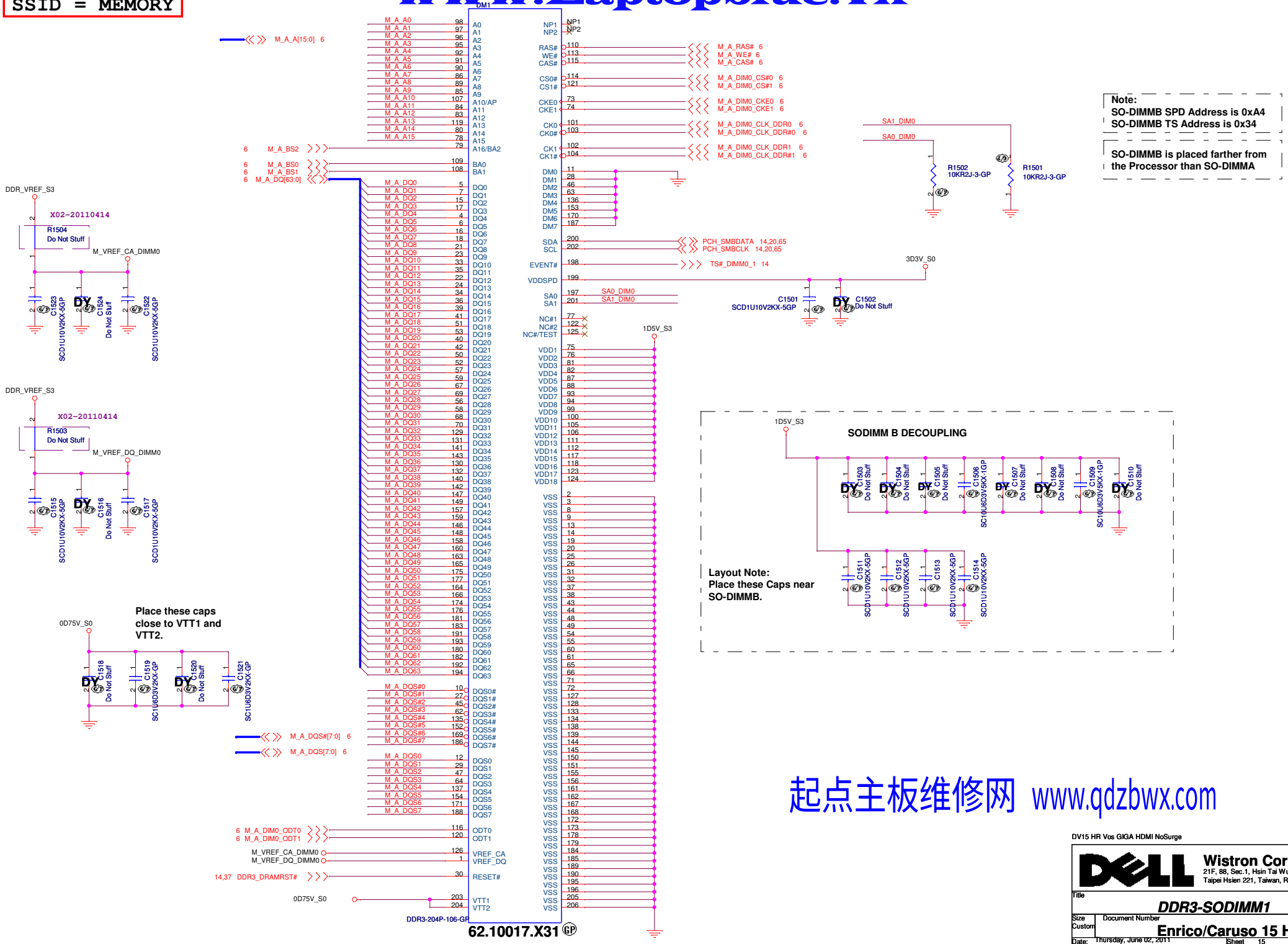

Note:
SO-DIMMB SPD Address is 0xA4
SO-DIMMB TS Address is 0x34

SO-DIMMB is placed farther from the Processor than SO-DIMMA

62.10017.X31

DV15 HR Vos GIGA HDMI NoSurge

Wistron Corporation
21F, 88, Sec.1, Hsin Tai Wu Rd., Hsichih,
Taipei Hsien 221, Taiwan, R.O.C.

Title: DDR3-SODIMM1

Size: Custom | Document Number: Enrico/Caruso 15 HR | Rev: X01

Date: Thursday, June 02, 2011 | Sheet 15 of 104

(Blanking)

DV15 HR Vos GIGA HDMI NoSurge

Wistron Corporation
21F, 88, Sec.1, Hsin Tai Wu Rd., Hsichih,
Taipei Hsien 221, Taiwan, R.O.C.

Title: Reserved

Size: A3 | Document Number: Enrico/Caruso 15 HR | Rev: X01

Date: Thursday, June 02, 2011 | Sheet 16 of 104

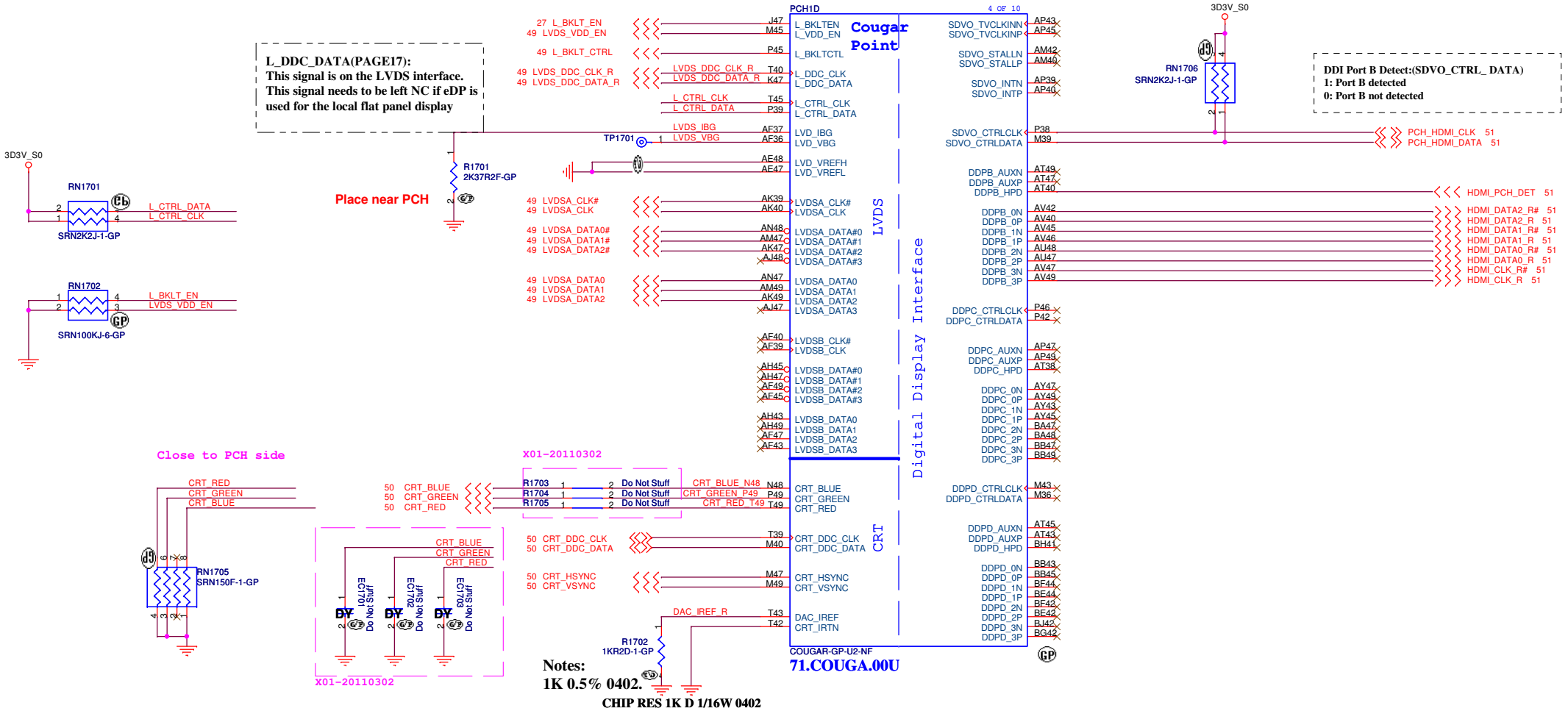

DV15 HR Vos GIGA HDMI NoSurge

Wistron Corporation
21F, 88, Sec.1, Hsin Tai Wu Rd., Hsichih,
Taipei Hsien 221, Taiwan, R.O.C.

Title: **PCH (LVDS/CRT/DDI)**

Size	Document Number	Rev
A3	Enrico/Caruso 15 HR	X01

Date: Thursday, June 02, 2011 Sheet 17 of 104

SSID = PCH

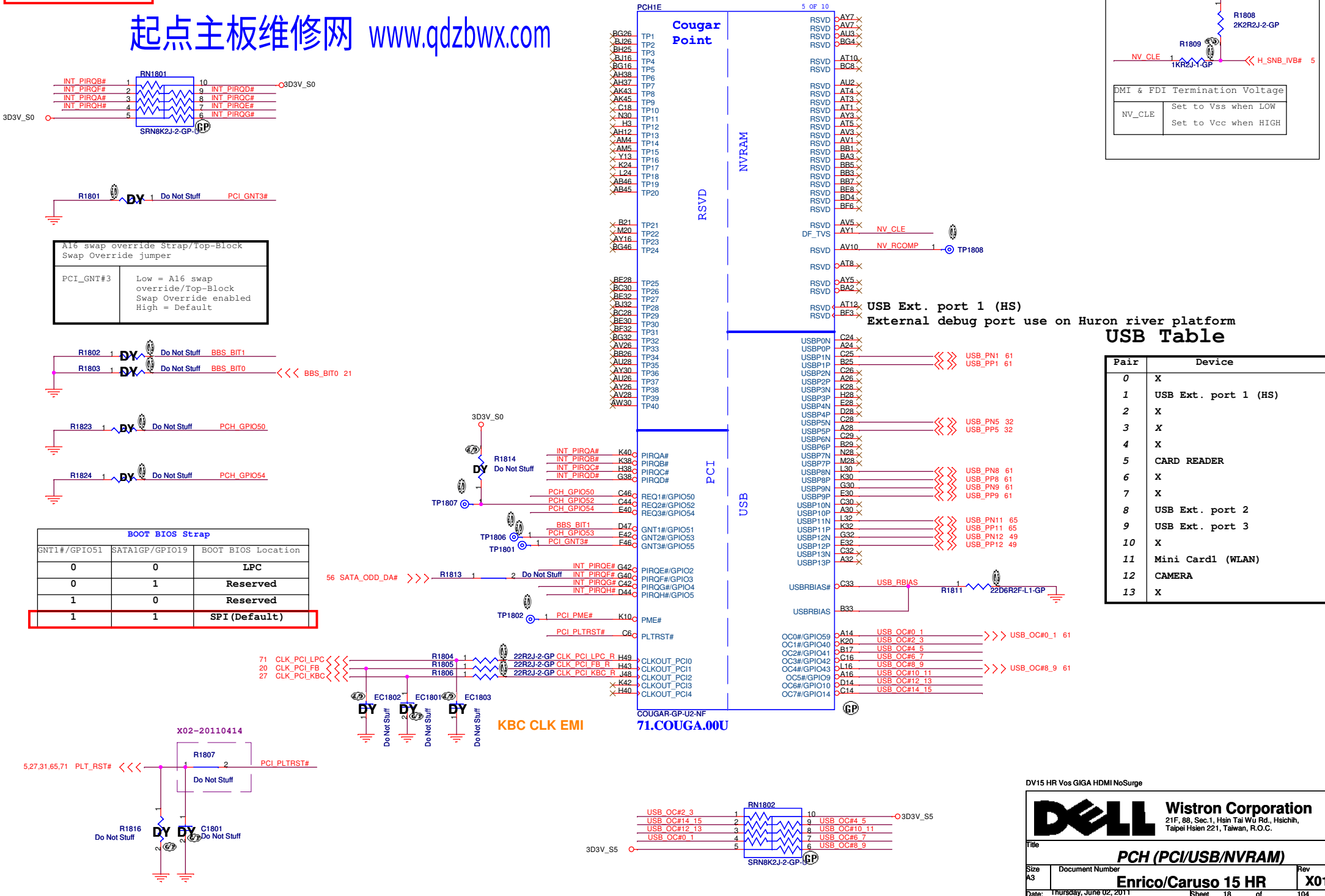

USB Table

Pair	Device
0	X
1	USB Ext. port 1 (HS)
2	X
3	X
4	X
5	CARD READER
6	X
7	X
8	USB Ext. port 2
9	USB Ext. port 3
10	X
11	Mini Card1 (WLAN)
12	CAMERA
13	X

SSID = PCH

Signal Routing Guideline:
DMI_ZCOMP keep W=4 mils and routing length less than 500 mils.
DMI_IRCOMP keep W=4 mils and routing length less than 500 mils.

PCH1C — Cougar Point — 3 OF 10

DMI: DMI0RXN, DMI1RXN, DMI2RXN, DMI3RXN, DMI0RXP, DMI1RXP, DMI2RXP, DMI3RXP, DMI0TXN, DMI1TXN, DMI2TXN, DMI3TXN, DMI0TXP, DMI1TXP, DMI2TXP, DMI3TXP, DMI_ZCOMP, DMI_IRCOMP, DMI2RBIAS

FDI: FDI_RXN0, FDI_RXN1, FDI_RXN2, FDI_RXN3, FDI_RXN4, FDI_RXN5, FDI_RXN6, FDI_RXN7, FDI_RXP0, FDI_RXP1, FDI_RXP2, FDI_RXP3, FDI_RXP4, FDI_RXP5, FDI_RXP6, FDI_RXP7, FDI_INT, FDI_FSYNC0, FDI_FSYNC1, FDI_LSYNC0, FDI_LSYNC1

System Power Management: DSWVRMEN, DPWROK, WAKE#, CLKRUN#/GPIO32, SUS_STAT#/GPIO61, SUSCLK/GPIO62, SLP_S5#/GPIO63, SLP_S4#, SLP_S3#, SLP_A#, SLP_SUS#, PMSYNCH, SLP_LAN#/GPIO29, SUSACK#, SYS_RESET#, SYS_PWROK, PWROK, APWROK, DRAMPWROK, RSMRST#, SUSWARN#/SUSPWRDNACK/GPIO30, PWRBTN#, ACPRESENT/GPIO31, BATLOW#/GPIO72, RI#

COUGAR-GP-U2-NF
71.COUGA.00U

1D05V_VTT
R1901 49D9R2F-GP DMI_COMP_R
R1902 750R2F-GP RBIAS_CPY
R1926 DY Do Not Stuff SYS_PWROK
R1904 100KR2J-1-GP PWROK
SUS_PWR_ACK R1903 DY Do Not Stuff SUSACK#
XDP_DBRESET# R1925 Do Not Stuff SYS_RESET#
3D3V_S0 R1905 DY Do Not Stuff
SYS_PWROK R1923 DY Do Not Stuff
S0_PWR_GOOD R1924 Do Not Stuff PWROK
R1906 Do Not Stuff
RUNPWROK R1907 DY Do Not Stuff MEPWROK
PM_DRAM_PWRGD
S0_PWR_GOOD after PM_SLP_S3# delay 150 ms
PM_RSMRST#
SUS_PWR_ACK
PM_PWRBTN#
AC_PRESENT
BATLOW#
PM_RI#

DSWODVREN
PCH_DPWROK R1910 Do Not Stuff PM_RSMRST# R1911 DY Do Not Stuff RTC_AUX_S5
PCH_WAKE# R1915 0R2J-2-GP A00-20110517 PCH_WAKE# 27
PM_CLKRUN# 27
PM_SUS_STAT# TP1901
SUS_CLK R1913 Do Not Stuff PCH_SUSCLK_KBC 27
PM_SLP_S5# TP1902
PM_SLP_S4# 27,46
PM_SLP_S3# 27,36,37,47
PM_SLP_A# TP1903
PM_SLP_SUS# TP1904
H_PM_SYNC H_PM_SYNC 5
PM_SLP_LAN# TP1905
PM_RSMRST# R1912 Do Not Stuff RSMRST#_KBC 27

DSWODVREN - On Die DSW VR Enable	
HIGH	Enabled (DEFAULT)
LOW	Disabled

RTC_AUX_S5
R1917 330KR2J-L1-GP
DSWODVREN R1918 DY Do Not Stuff

3D3V_S0
PM_CLKRUN# R1919 8K2R2J-3-GP

3D3V_S5
RN1901 SRN10KJ-6-GP
PCH_WAKE# R
SUS_PWR_ACK
PM_RI#
BATLOW#
R1909 100KR2J-1-GP AC_PRESENT
R1922 DY Do Not Stuff PM_PWRBTN#
R1920 DY Do Not Stuff PM_SLP_LAN#
R1908 10KR2J-3-GP PM_RSMRST#

PCH_SUSCLK_KBC
EC1901 DY Do Not Stuff

DV15 HR Vos GIGA HDMI NoSurge

Wistron Corporation
21F, 88, Sec.1, Hsin Tai Wu Rd., Hsichih, Taipei Hsien 221, Taiwan, R.O.C.

Title: PCH (DM I/FDI/PM)
Size: A3 | Document Number: Enrico/Caruso 15 HR | Rev: X01
Date: Thursday, June 02, 2011 | Sheet 19 of 104

SSID = PCH

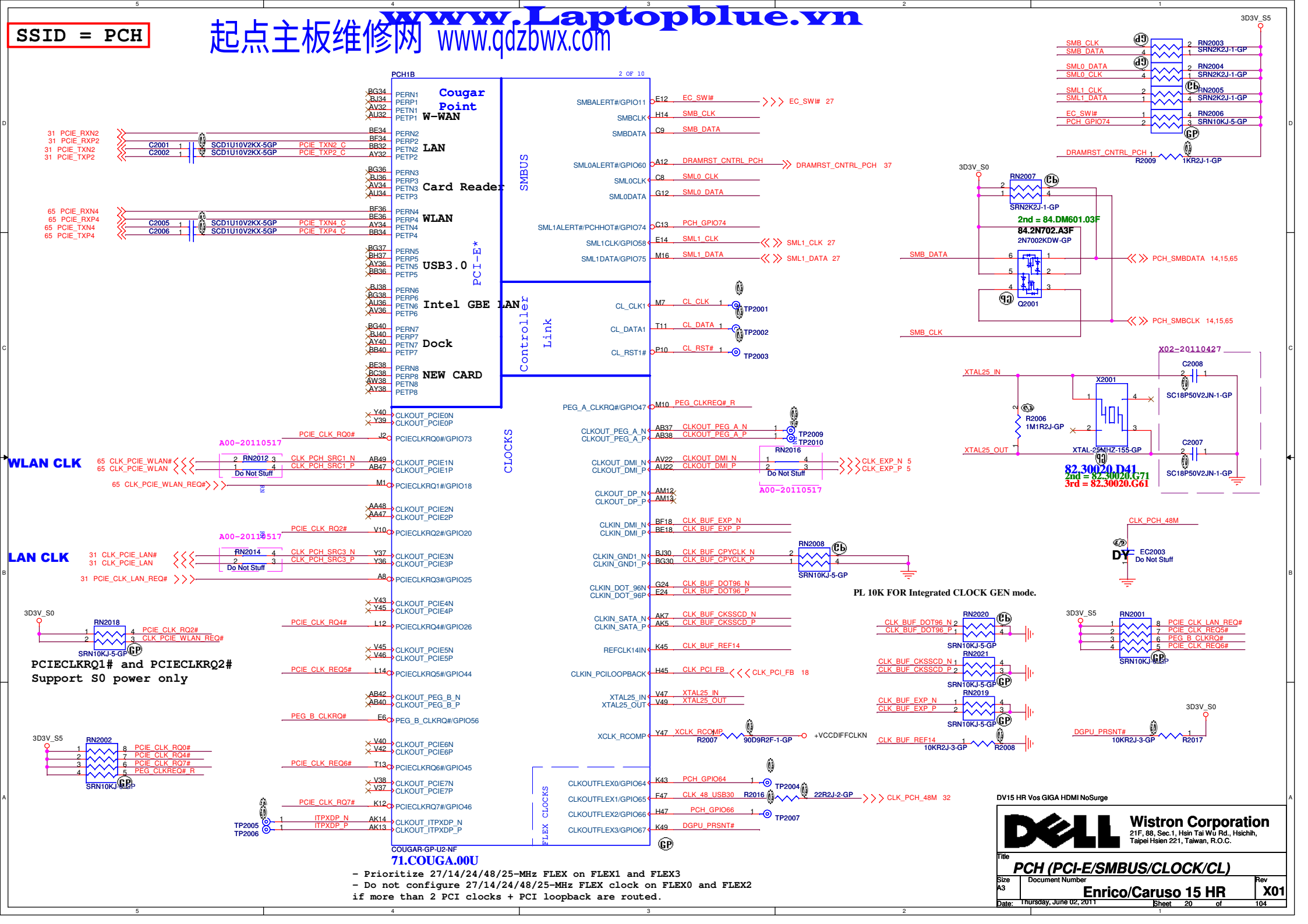

SSID = PCH

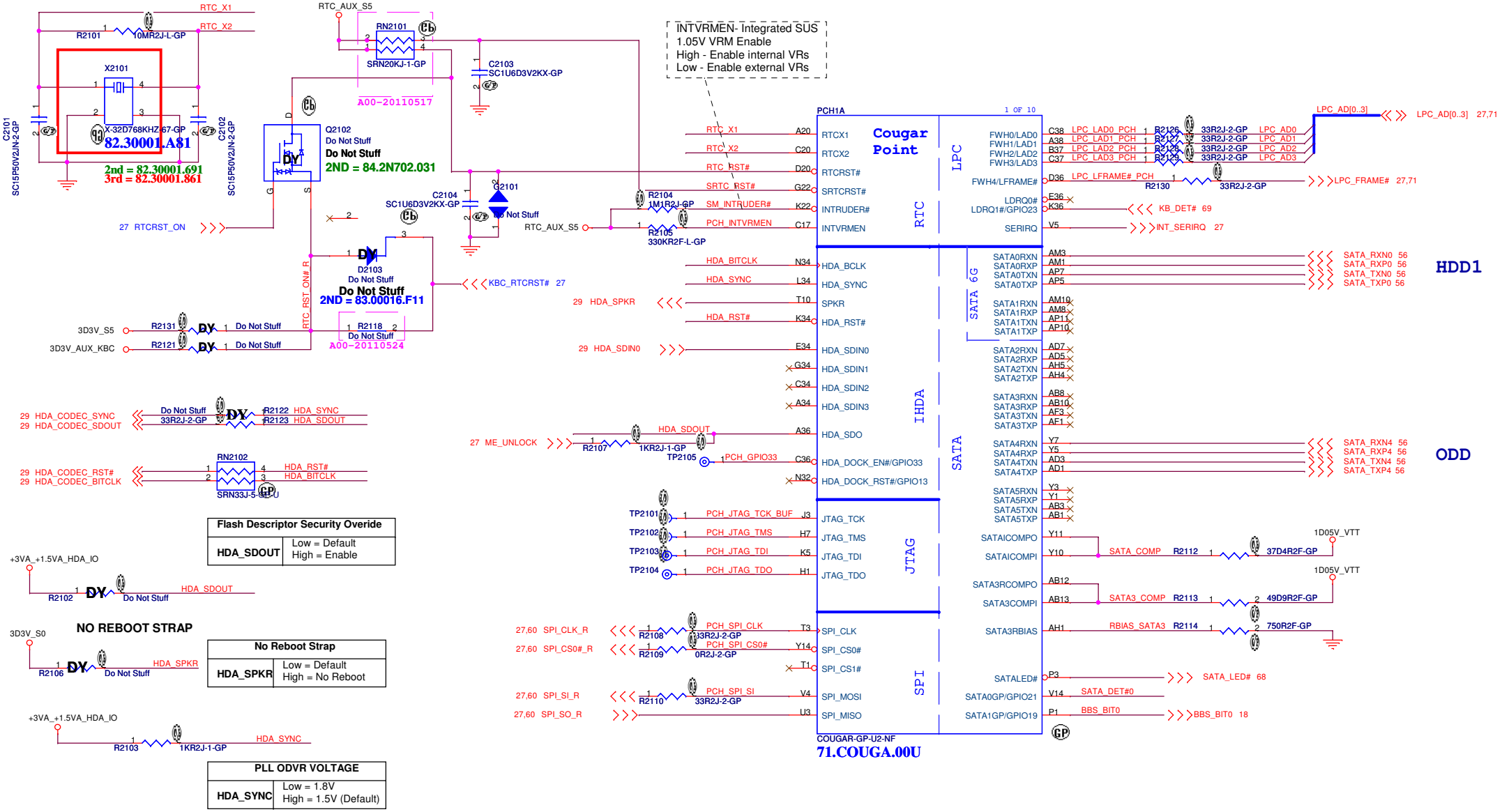

DV15 HR Vos GIGA HDMI NoSurge

Wistron Corporation
21F, 88, Sec.1, Hsin Tai Wu Rd., Hsichih, Taipei Hsien 221, Taiwan, R.O.C.

Title: **PCH (SPI/RTC/LPC/SATA/IHDA)**

Size	Document Number	Rev
A3	Enrico/Caruso 15 HR	X01

Date: Thursday, June 02, 2011 Sheet 21 of 104

SSID = PCH

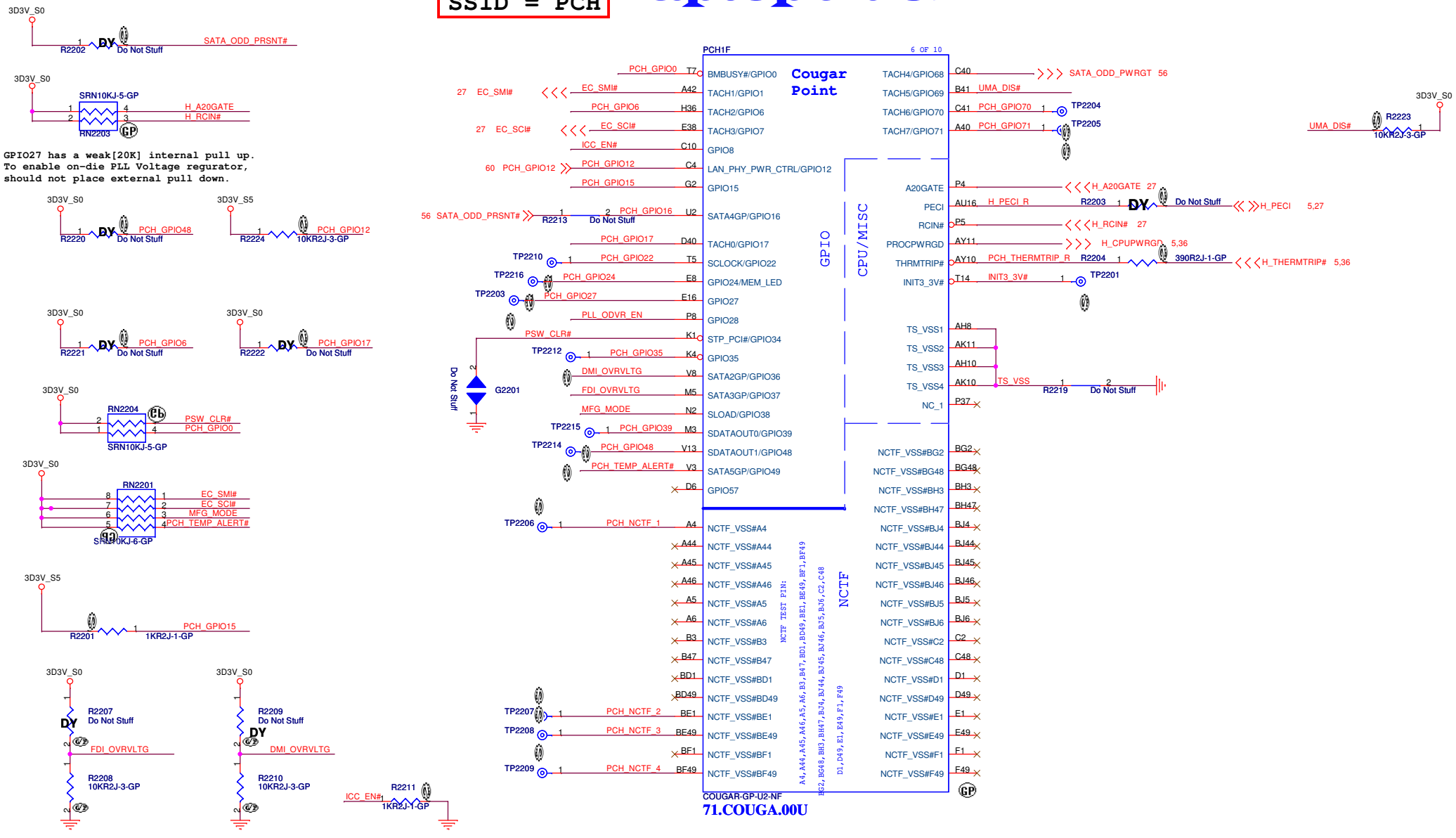

DV15 HR Vos GIGA HDMI NoSurge

Wistron Corporation
21F, 88, Sec.1, Hsin Tai Wu Rd., Hsichih,
Taipei Hsien 221, Taiwan, R.O.C.

Title: PCH (GPIO/CPU)

Size: A3 | Document Number: Enrico/Caruso 15 HR | Rev: X01

Date: Thursday, June 02, 2011 | Sheet 22 of 104

SSID = PCH

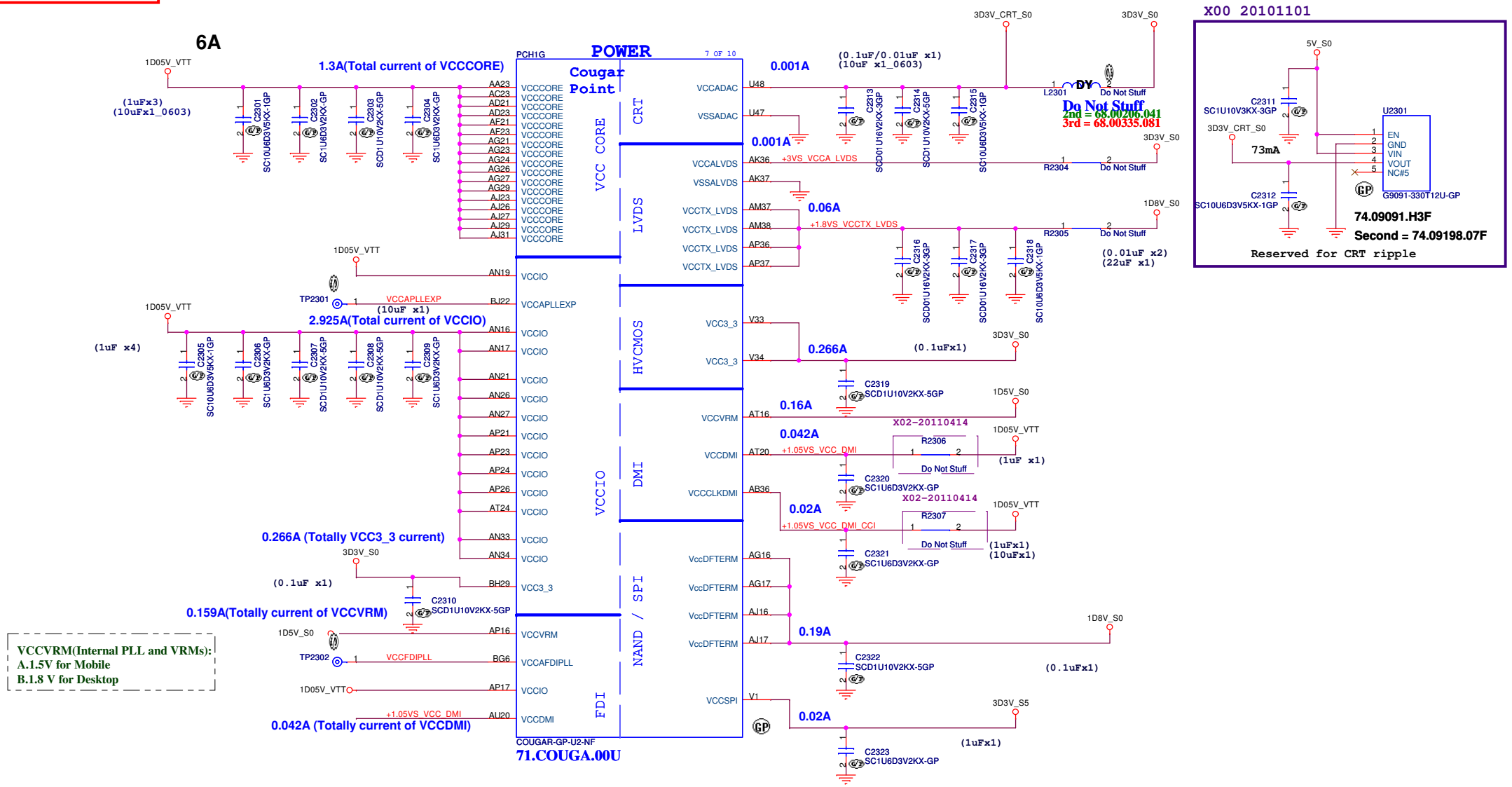

DV15 HR Vos GIGA HDMI NoSurge

Wistron Corporation
21F, 88, Sec.1, Hsin Tai Wu Rd., Hsichih,
Taipei Hsien 221, Taiwan, R.O.C.

Title: PCH (POWER1)

Size: A3 | Document Number: Enrico/Caruso 15 HR | Rev: X01

Date: Thursday, June 02, 2011 | Sheet 23 of 104

SSID = PCH

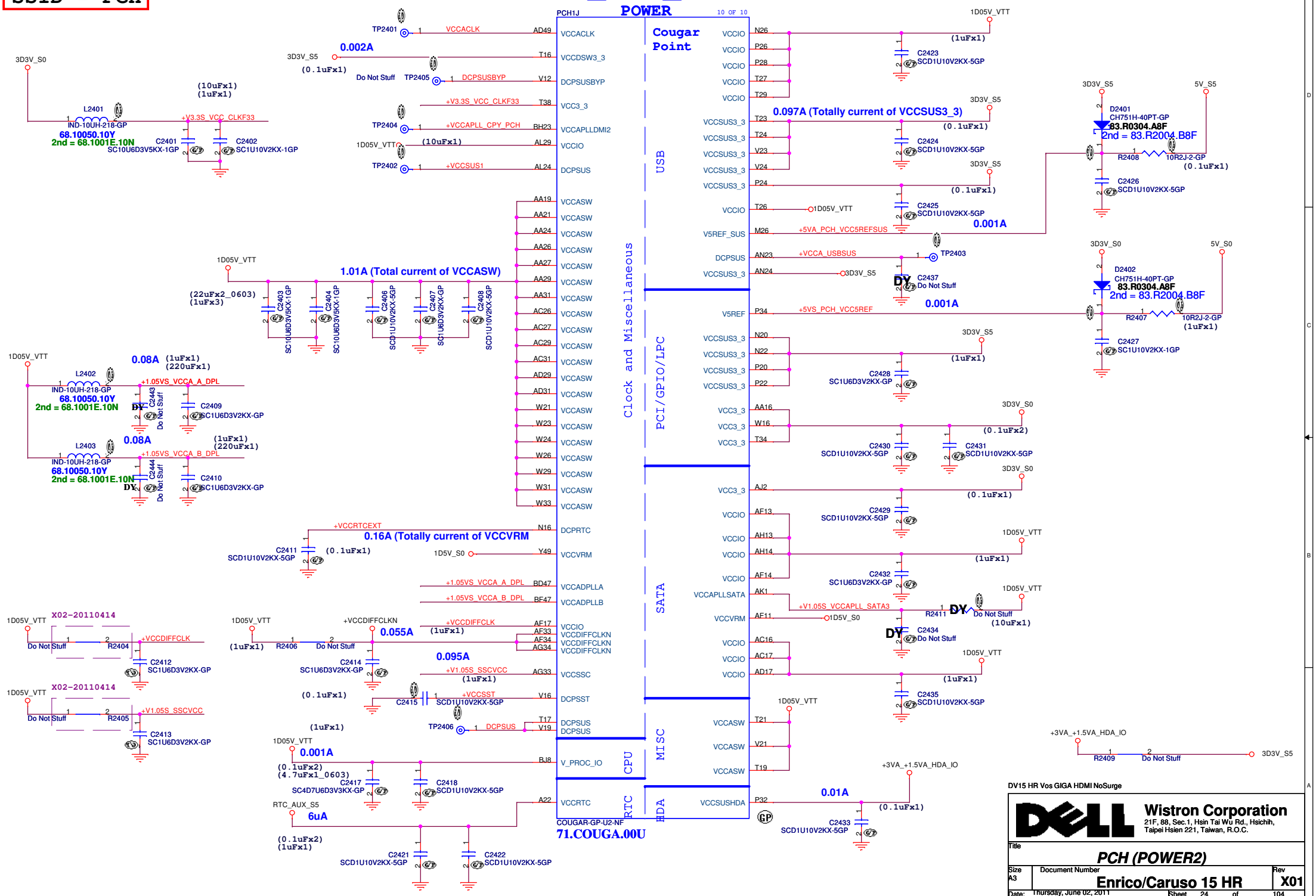

SSID = PCH

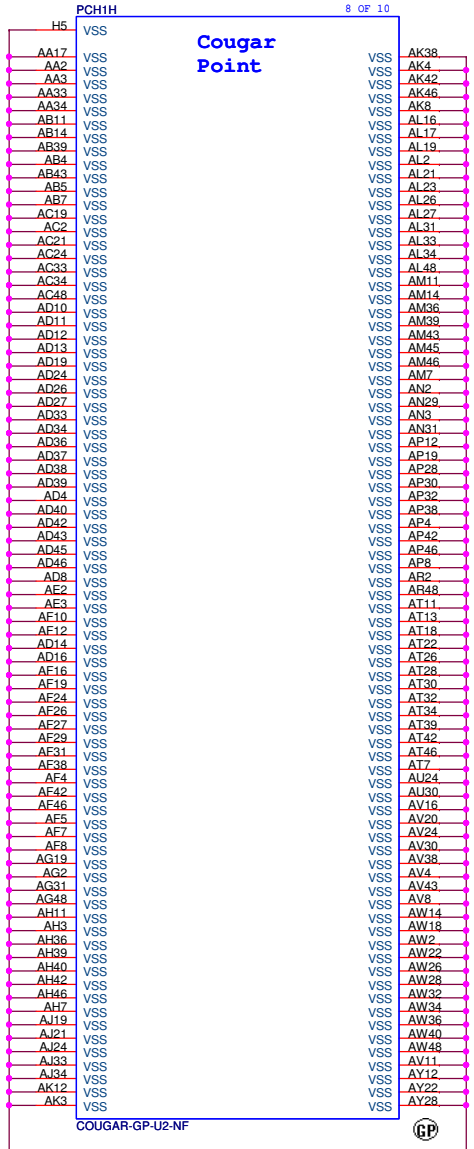

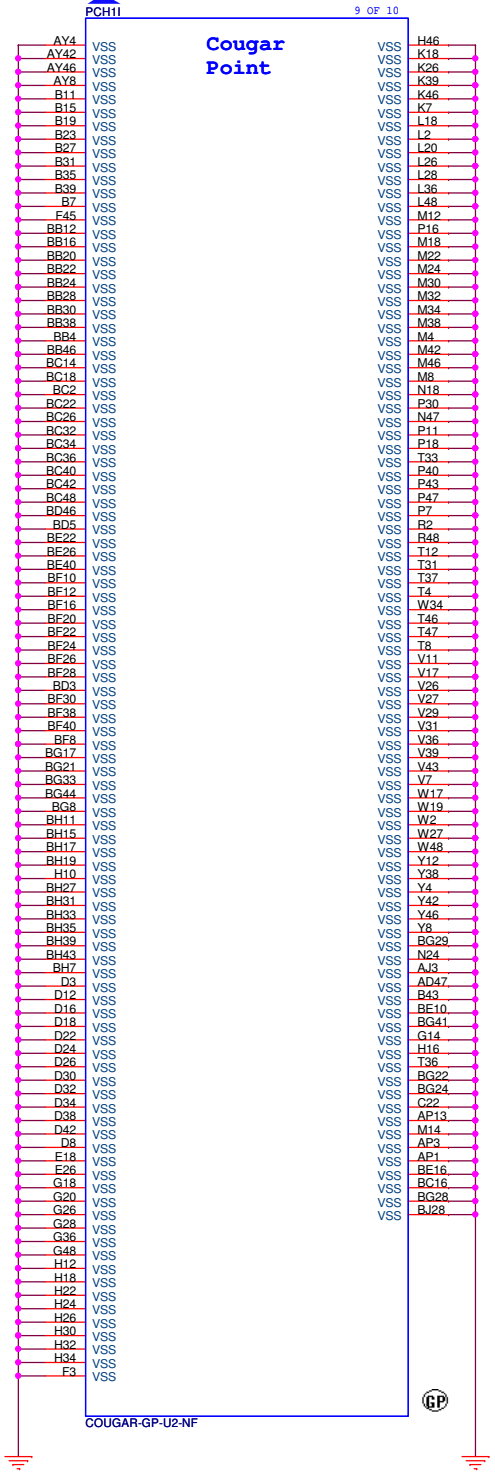

DV15 HR Vos GIGA HDMI NoSurge

Wistron Corporation
21F, 88, Sec.1, Hsin Tai Wu Rd., Hsichih,
Taipei Hsien 221, Taiwan, R.O.C.

Title: ***PCH (VSS)***

Size	Document Number	Rev
A3	Enrico/Caruso 15 HR	X01

Date: Thursday, June 02, 2011 Sheet 25 of 104

(Blanking)

DV15 HR Vos GIGA HDMI NoSurge

Wistron Corporation
21F, 88, Sec.1, Hsin Tai Wu Rd., Hsichih,
Taipei Hsien 221, Taiwan, R.O.C.

Title: *Reserved*

Size: A3 | Document Number: Enrico/Caruso 15 HR | Rev: X01

Date: Thursday, June 02, 2011 | Sheet 26 of 104

SSID = KBC

PCB_VER_AD	PULL-LOW RESISTOR	PULL-HIGH RESISTOR	VOLTAGE
A00	100.0K	10.0K	3.0V
X01	100.0K	20.0K	2.75V
X02	100.0K	33.0K	2.48V
A00	100.0K	47.0K	2.24V
Reserved	100.0K	64.9K	2.0V
Reserved	100.0K	76.8	1.87V
Reserved	100.0K	100.0K	1.65V
Reserved	100.0K	143.0K	1.358V
Reserved	100.0K	174.0K	1.204V
Reserved	100.0K	215.0K	1.048V

MODEL_ID_DET(GPIO07)	PULL-LOW RESISTOR	PULL-HIGH RESISTOR	VOLTAGE
DV14_UMA	100.0K	10.0K(64.10025.6DL)	3.0V
DV14_DIS_PX	100.0K	20.0K(64.20025.6DL)	2.75V
DV15_UMA with HDMI	100.0K	33.0K	2.48V
DV15_UMA without HDMI	100.0K	47.0K(64.47025.6DL)	2.24V
Reserved	100.0K	64.9K(64.64925.6DL)	2.0V
Reserved	100.0K	76.8K	1.87V
Reserved	100.0K	100.0K	1.65V
Reserved	100.0K	143.0K	1.358V
Reserved	100.0K	174.0K	1.204V
Reserved	100.0K	215.0K	1.048V

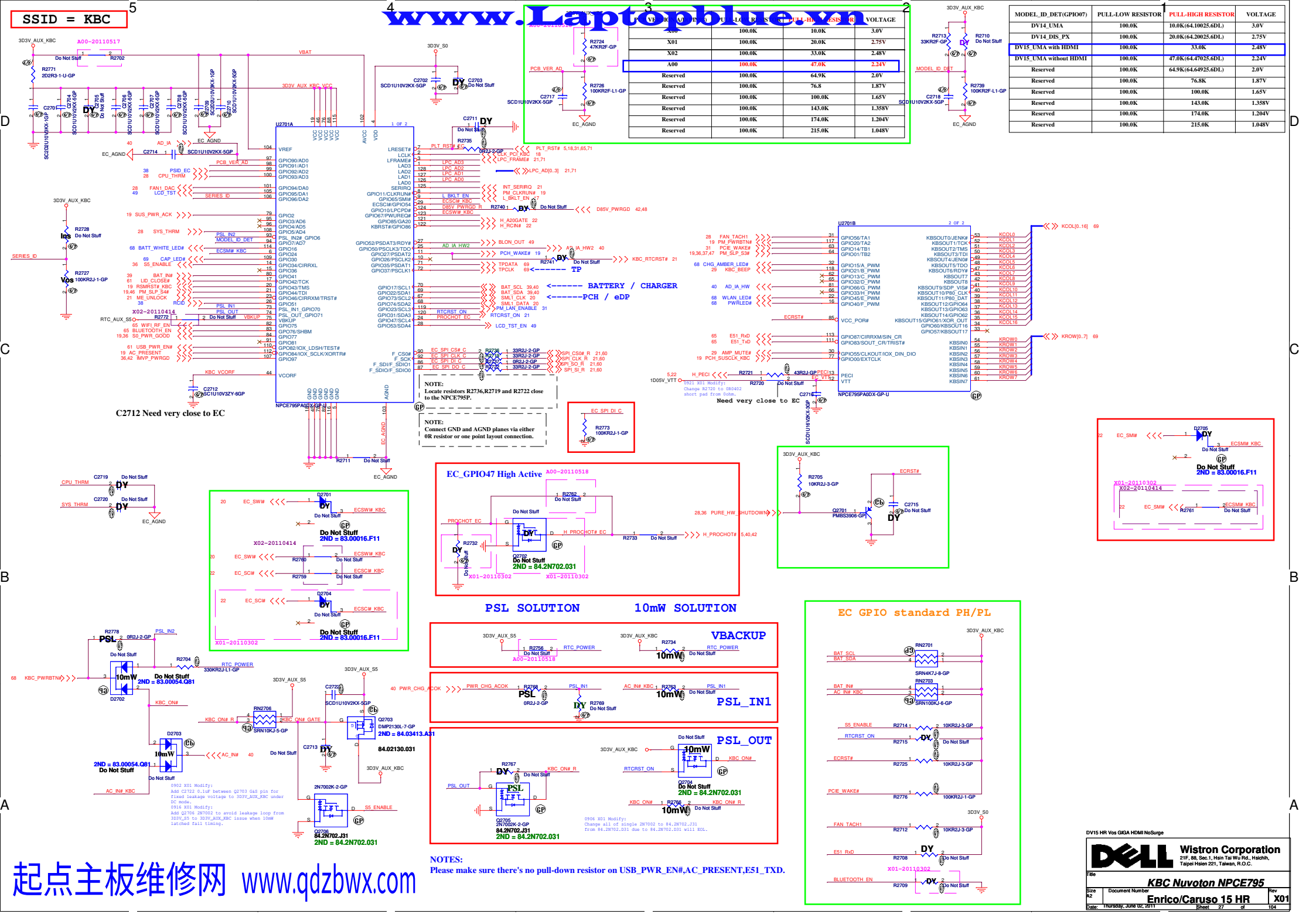

SSID = Thermal

Thermal sensor P2800

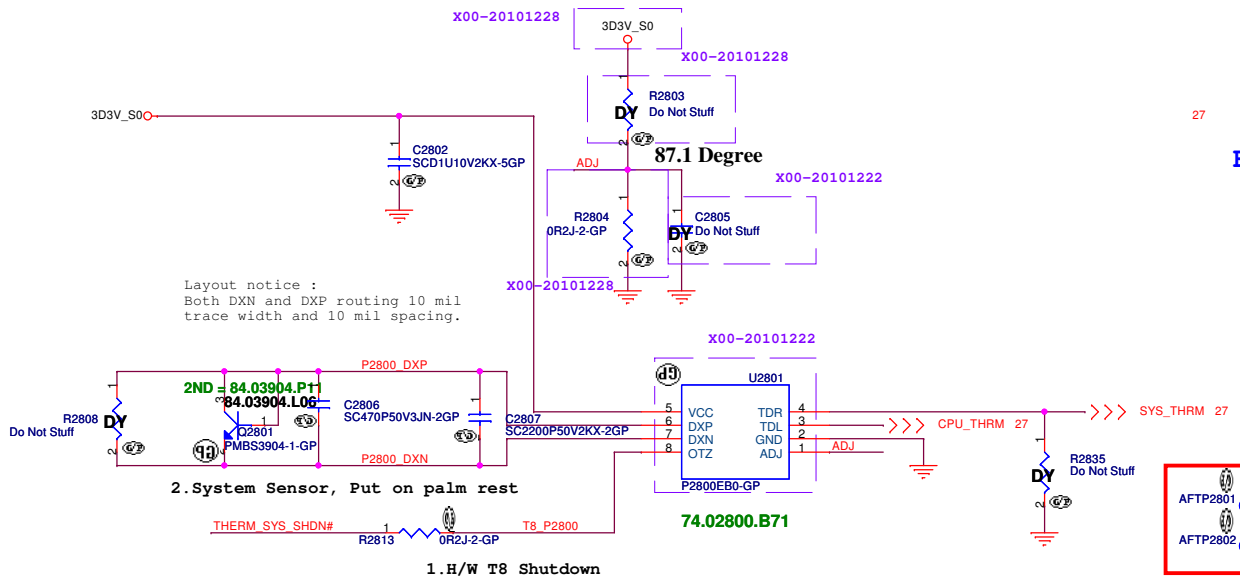

Fan controller G991

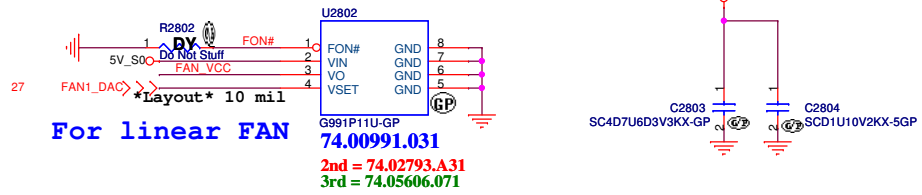

For linear FAN

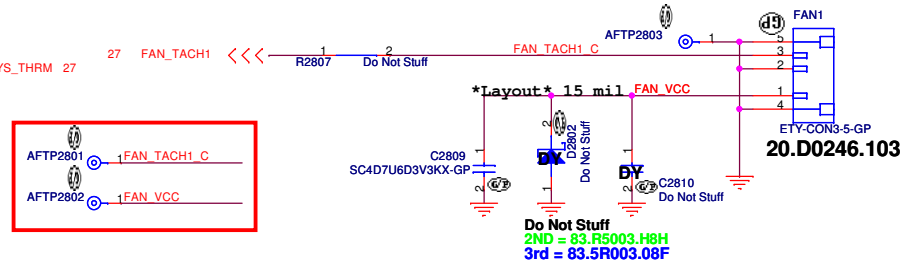

EMI/ESD

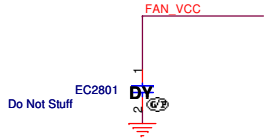

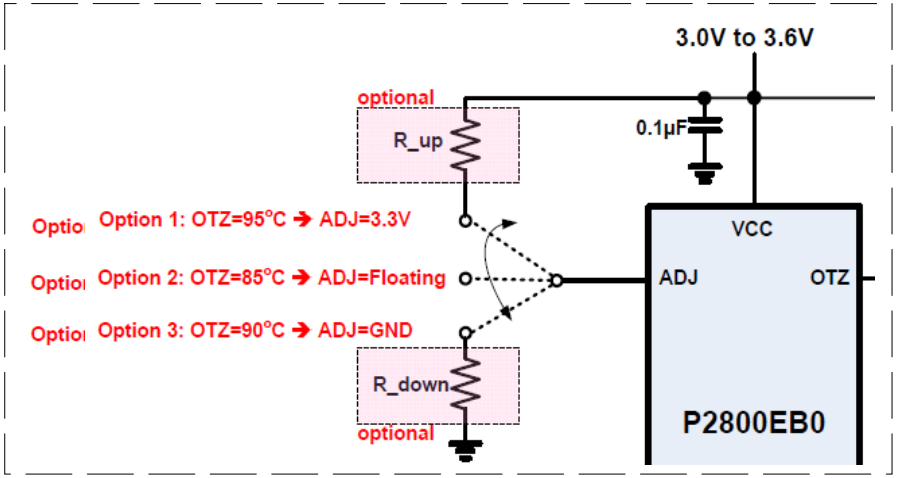

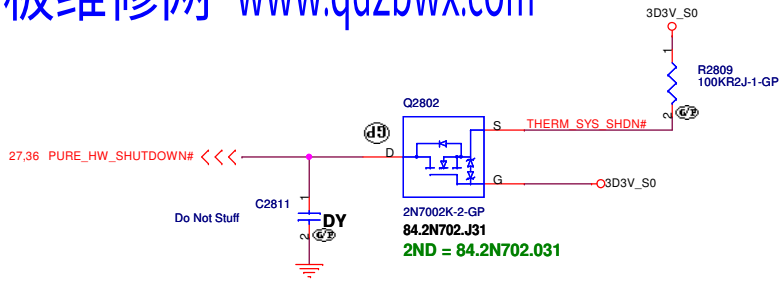

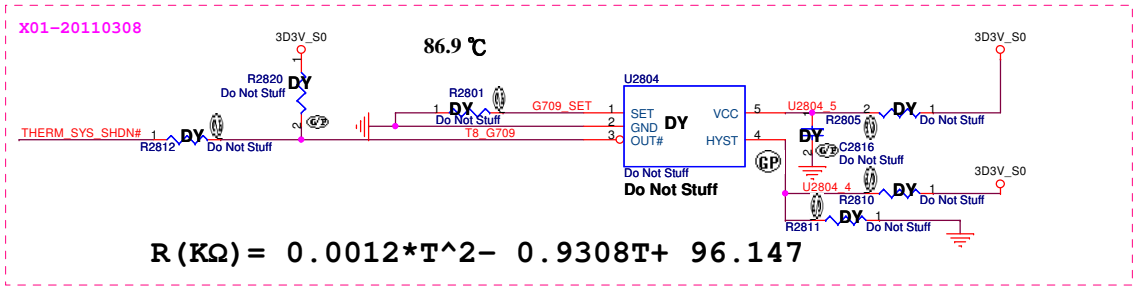

DV15 HR Vos GIGA HDMI NoSurge

Wistron Corporation
21F, 88, Sec.1, Hsin Tai Wu Rd., Hsichih,
Taipei Hsien 221, Taiwan, R.O.C.

Title: Thermal P2800/Fan Controllor P2793

Size	Document Number	Rev
A3	Enrico/Caruso 15 HR	X01

Date: Thursday, June 02, 2011 Sheet 28 of 104

SSID = AUDIO

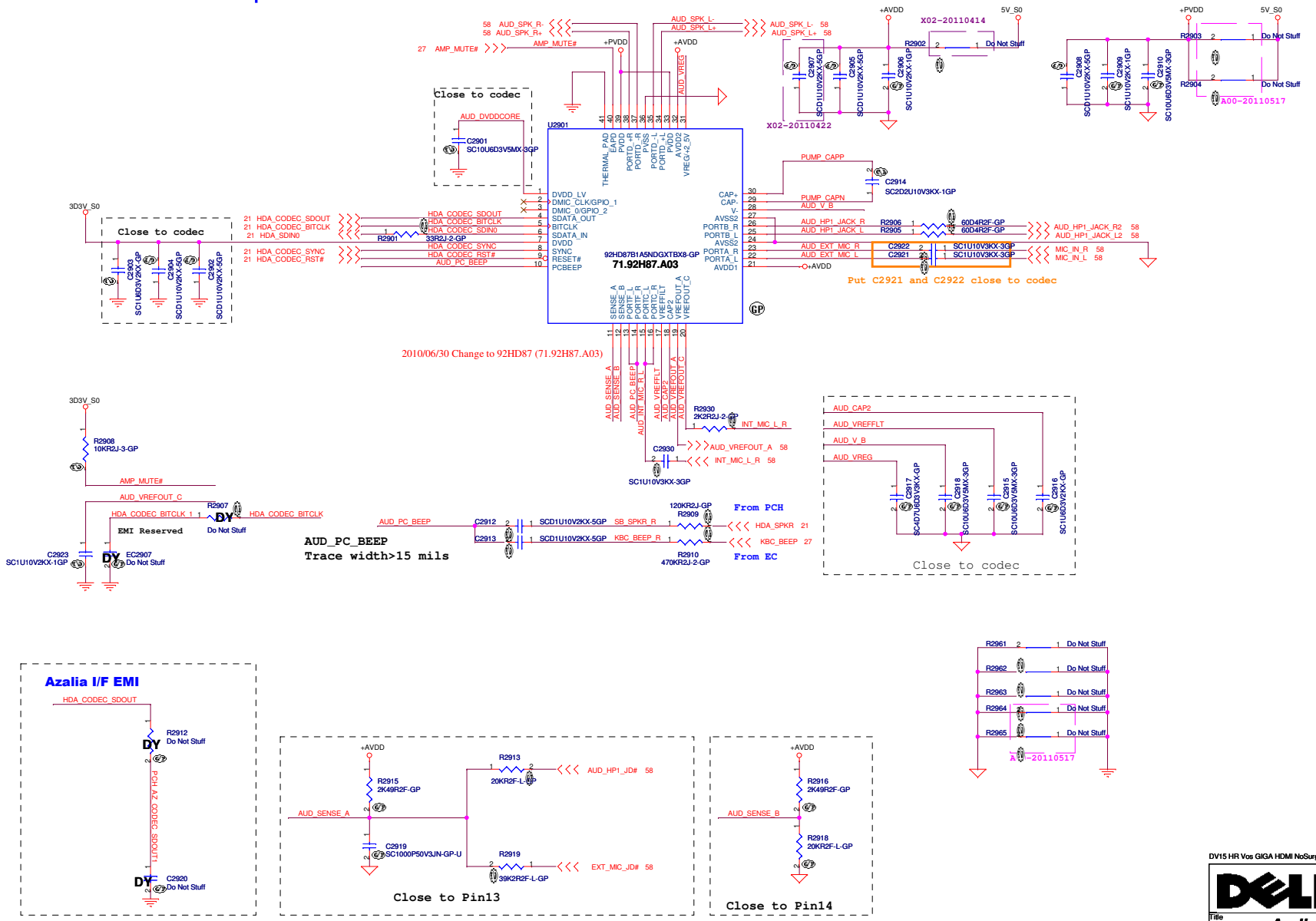

DV15 HR Vos GIGA HDMI NoSurge

Wistron Corporation
21F, 88, Sec.1, Hsin Tai Wu Rd., Hsichih,
Taipei Hsien 221, Taiwan, R.O.C.

Title: Audio Codec 92HD87B1

Size: Custom | Document Number: Enrico/Caruso 15 HR | Rev: X01

Date: Thursday, June 02, 2011 | Sheet 29 of 104

(Blanking)

DV15 HR Vos GIGA HDMI NoSurge

Wistron Corporation
21F, 88, Sec.1, Hsin Tai Wu Rd., Hsichih,
Taipei Hsien 221, Taiwan, R.O.C.

Title: Reserved

Size: A3 | Document Number: Enrico/Caruso 15 HR | Rev: X01

Date: Thursday, June 02, 2011 | Sheet 30 of 104

LAN CHIP

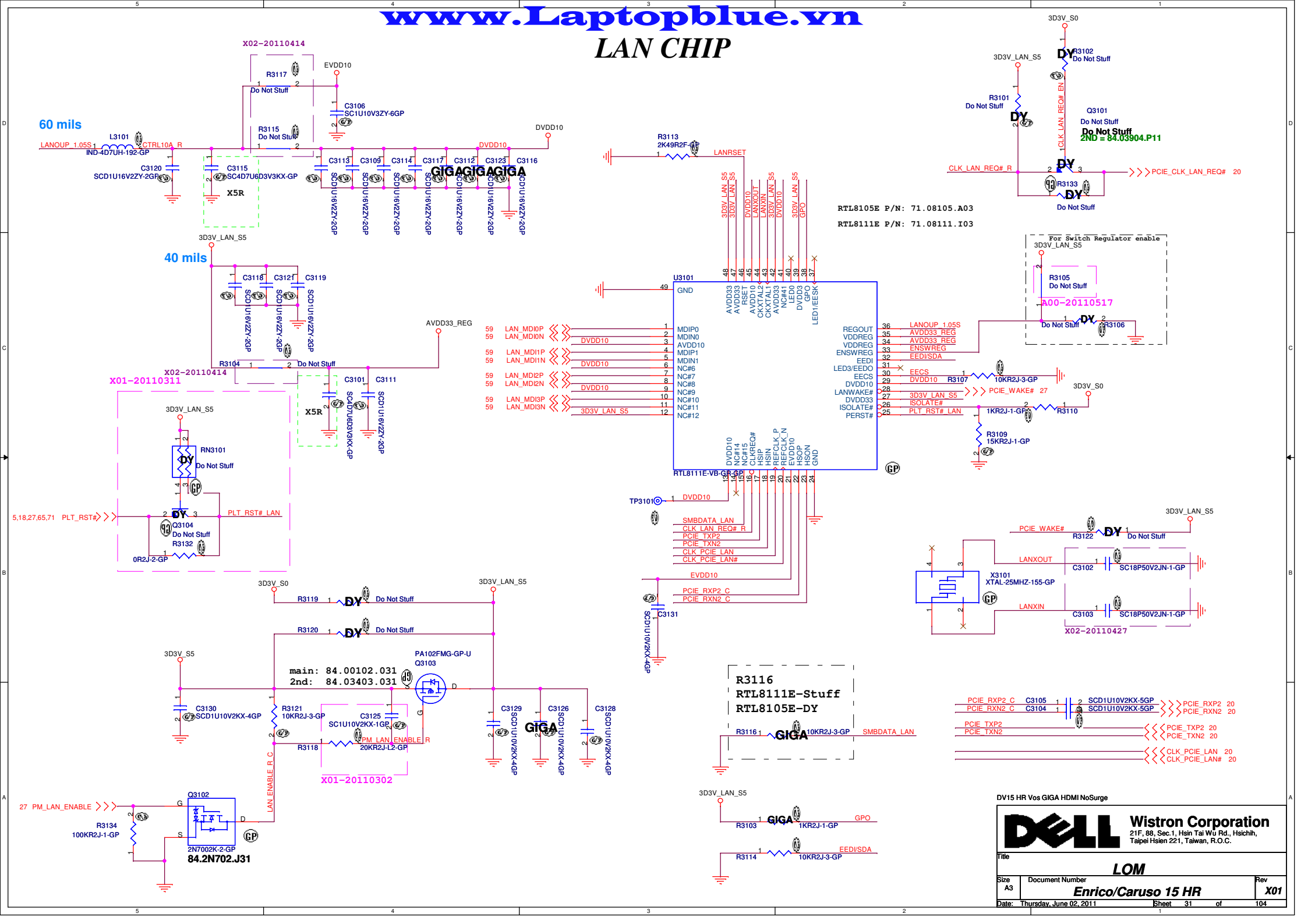

DV15 HR Vos GIGA HDMI NoSurge

Wistron Corporation
21F, 88, Sec.1, Hsin Tai Wu Rd., Hsichih,
Taipei Hsien 221, Taiwan, R.O.C.

Title		
LOM		
Size A3	Document Number Enrico/Caruso 15 HR	Rev X01
Date: Thursday, June 02, 2011	Sheet 31 of 104	

SSID = SDIO

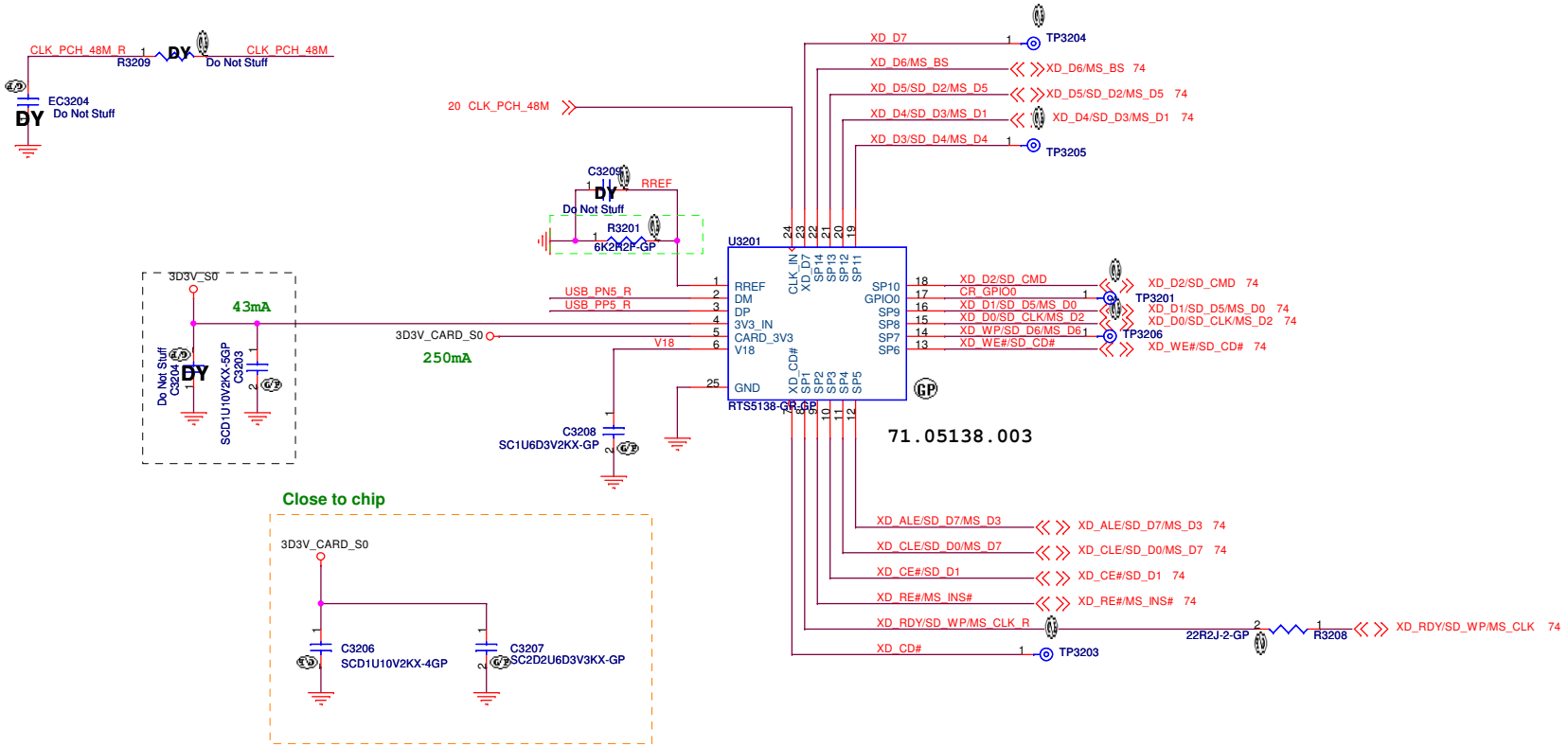

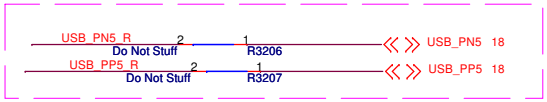

A00-20110530

DV15 HR Vos GIGA HDMI NoSurge

Wistron Corporation
21F, 88, Sec.1, Hsin Tai Wu Rd., Hsichih,
Taipei Hsien 221, Taiwan, R.O.C.

Title: Card Reader-RTS5138

Size: A3 | Document Number: Enrico/Caruso 15 HR | Rev: X01

Date: Thursday, June 02, 2011 | Sheet 32 of 104

(Blanking)

DV15 HR Vos GIGA HDMI NoSurge

Wistron Corporation
21F, 88, Sec.1, Hsin Tai Wu Rd., Hsichih,
Taipei Hsien 221, Taiwan, R.O.C.

Title	Reserved	
Size A3	Document Number Enrico/Caruso 15 HR	Rev X01
Date: Thursday, June 02, 2011	Sheet 33 of 104	

(Blanking)

DV15 HR Vos GIGA HDMI NoSurge

Wistron Corporation
21F, 88, Sec.1, Hsin Tai Wu Rd., Hsichih,
Taipei Hsien 221, Taiwan, R.O.C.

Title: Reserved

Size: A3 | Document Number: Enrico/Caruso 15 HR | Rev: X01

Date: Thursday, June 02, 2011 | Sheet 34 of 104

(Blanking)

DV15 HR Vos GIGA HDMI NoSurge

Wistron Corporation
21F, 88, Sec.1, Hsin Tai Wu Rd., Hsichih,
Taipei Hsien 221, Taiwan, R.O.C.

Title	Reserved	
Size A3	Document Number Enrico/Caruso 15 HR	Rev X01
Date: Thursday, June 02, 2011	Sheet 35 of 104	

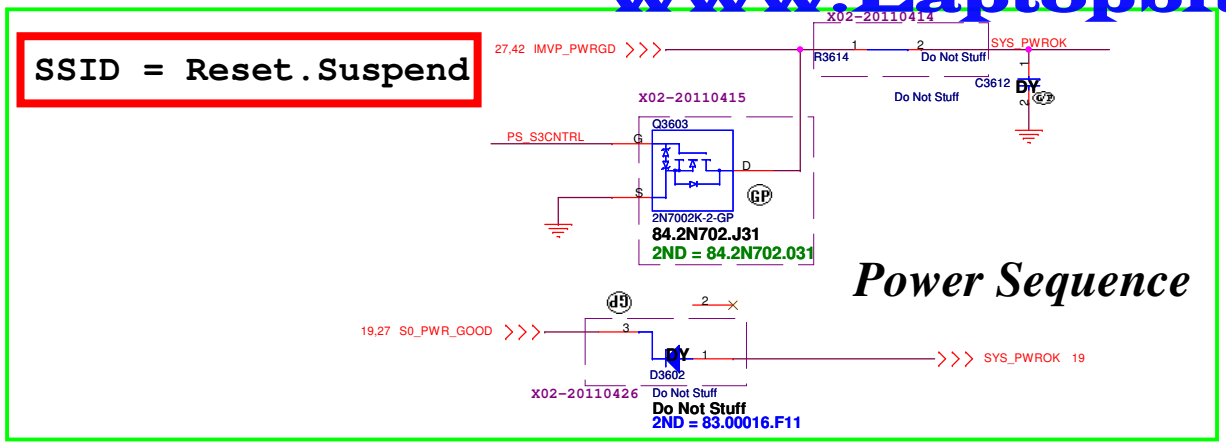

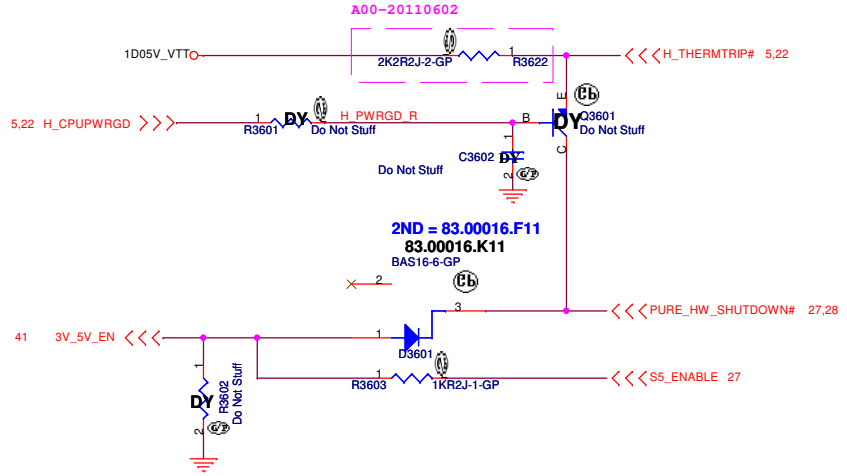

ROSA Run Power

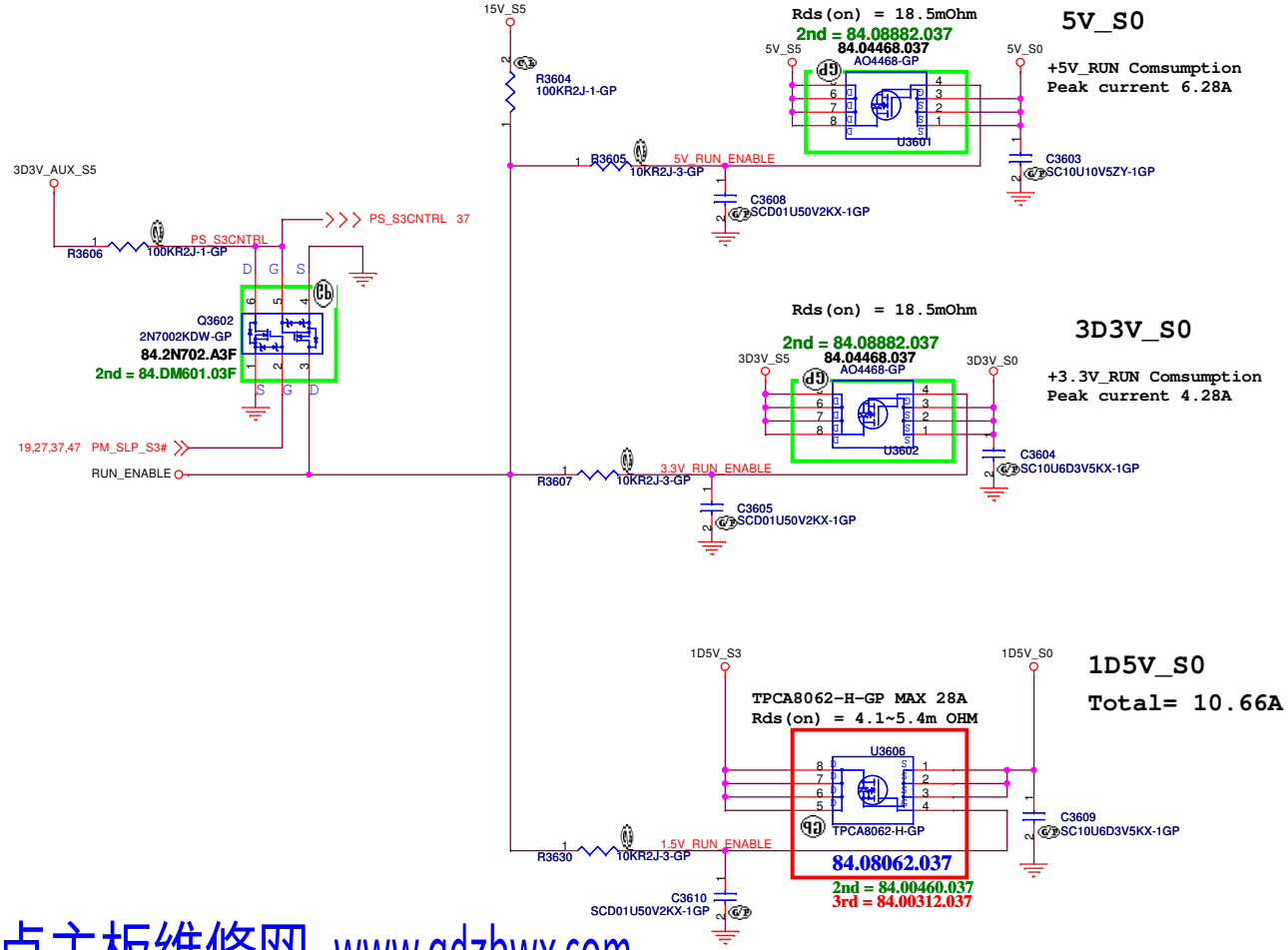

5V_S0

3D3V_S0

1D5V_S0

Total= 10.66A

DV15 HR Vos GIGA HDMI NoSurge

Wistron Corporation
21F, 88, Sec.1, Hsin Tai Wu Rd., Hsichih,
Taipei Hsien 221, Taiwan, R.O.C.

Title: Power Plane Enable

Size: A3 | Document Number: Enrico/Caruso 15 HR | Rev: X01

Date: Thursday, June 02, 2011 | Sheet 36 of 104

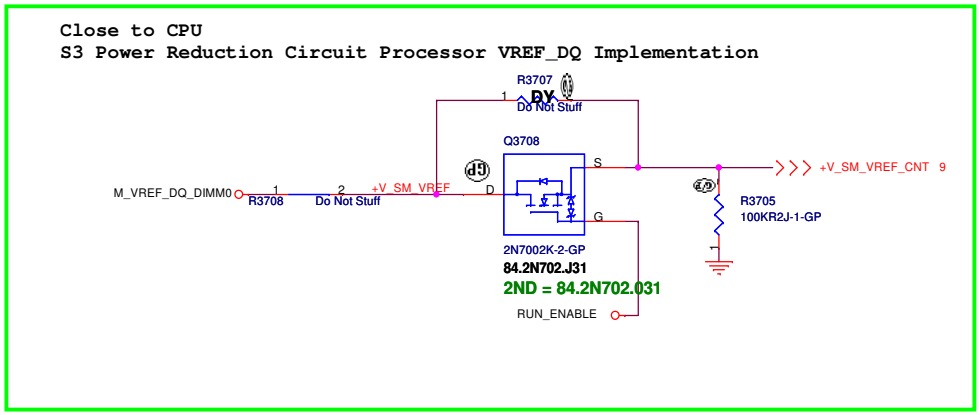

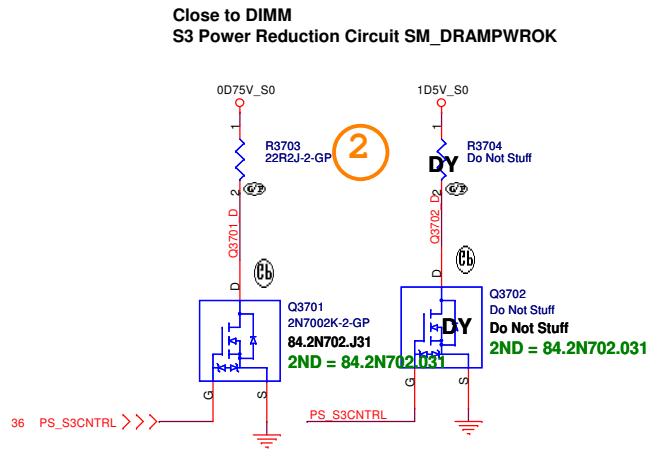

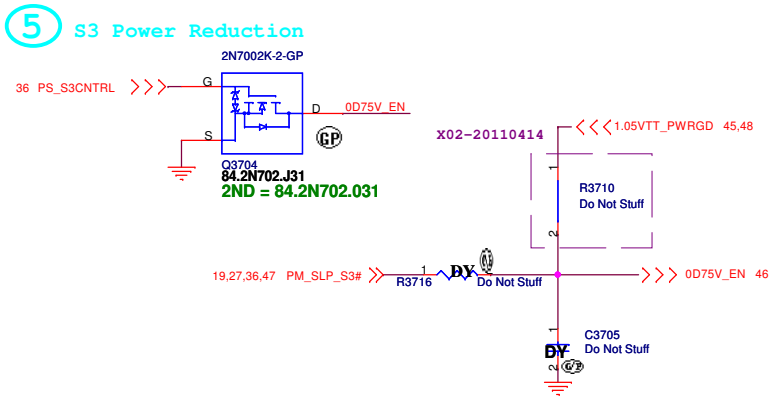

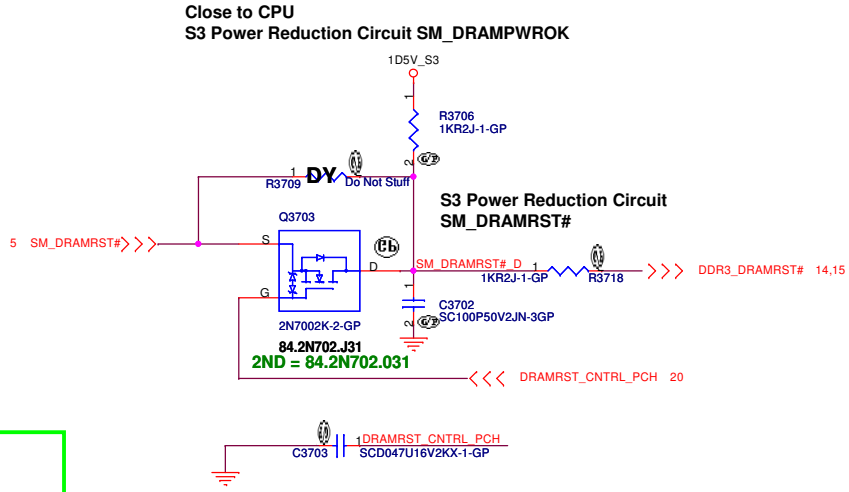

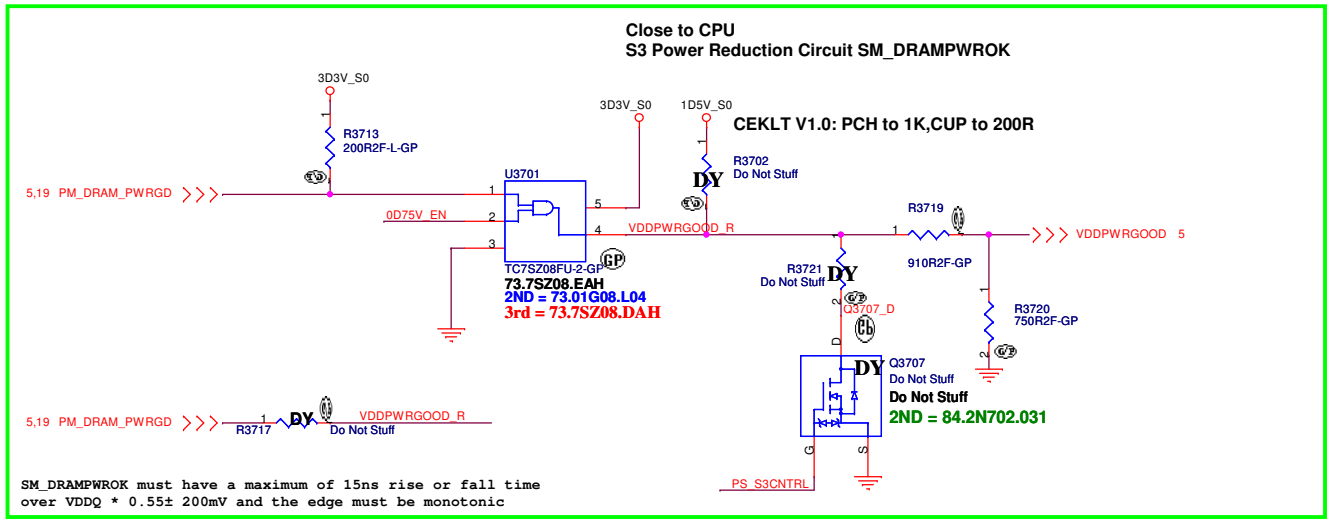

DV15 HR Vos GIGA HDMI NoSurge

Wistron Corporation
21F, 88, Sec.1, Hsin Tai Wu Rd., Hsichih,
Taipei Hsien 221, Taiwan, R.O.C.

Title: **ADAPTER**

Size	Document Number	Rev
A3	Enrico/Caruso 15 HR	X01

Date: Thursday, June 02, 2011 Sheet 37 of 104

SSID = PWR.Support

DCin CONN

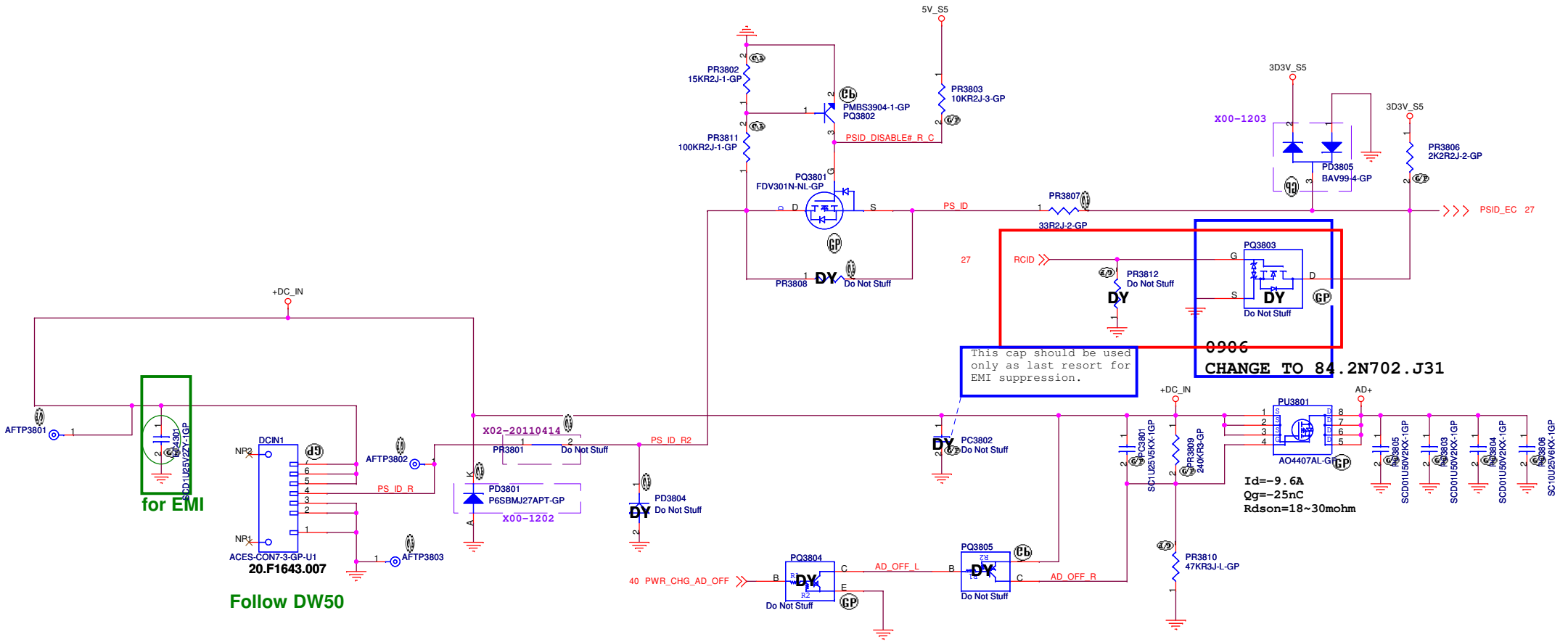

DV15 HR Vos GIGA HDMI NoSurge

Wistron Corporation
21F, 88, Sec.1, Hsin Tai Wu Rd., Hsichih, Taipei Hsien 221, Taiwan, R.O.C.

Title: DCIN

Size: A3 | Document Number: Enrico/Caruso 15 HR | Rev: X01

Date: Thursday, June 02, 2011 | Sheet 38 of 104

Batt Connecter

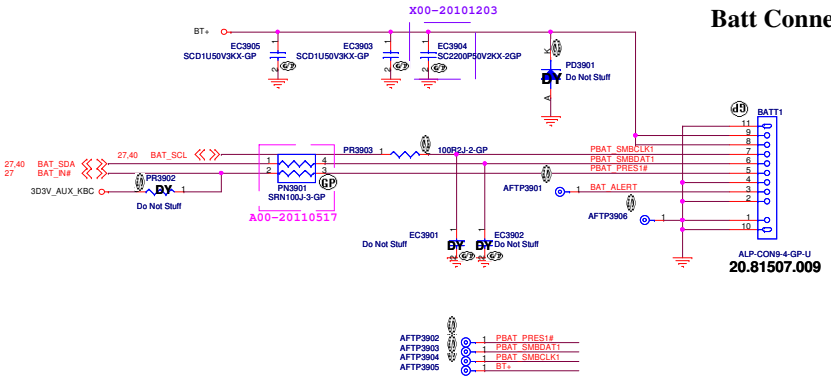

For actual location, need to be swap all pin

Close to Batt Connector

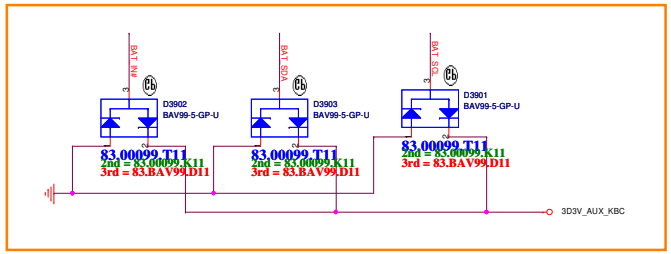

DV15 HR Vos GIGA HDMI NoSurge

Wistron Corporation
21F, 88, Sec.1, Hsin Tai Wu Rd., Hsichih,
Taipei Hsien 221, Taiwan, R.O.C.

Title: BATT CONN

Size: A2 | Document Number: Enrico/Caruso 15 HR | Rev: X01

Date: Thursday, June 02, 2011 | Sheet 39 of 104

SSID = Charger

EE need pull high and net name

0802 Rename H_PROCHOT#

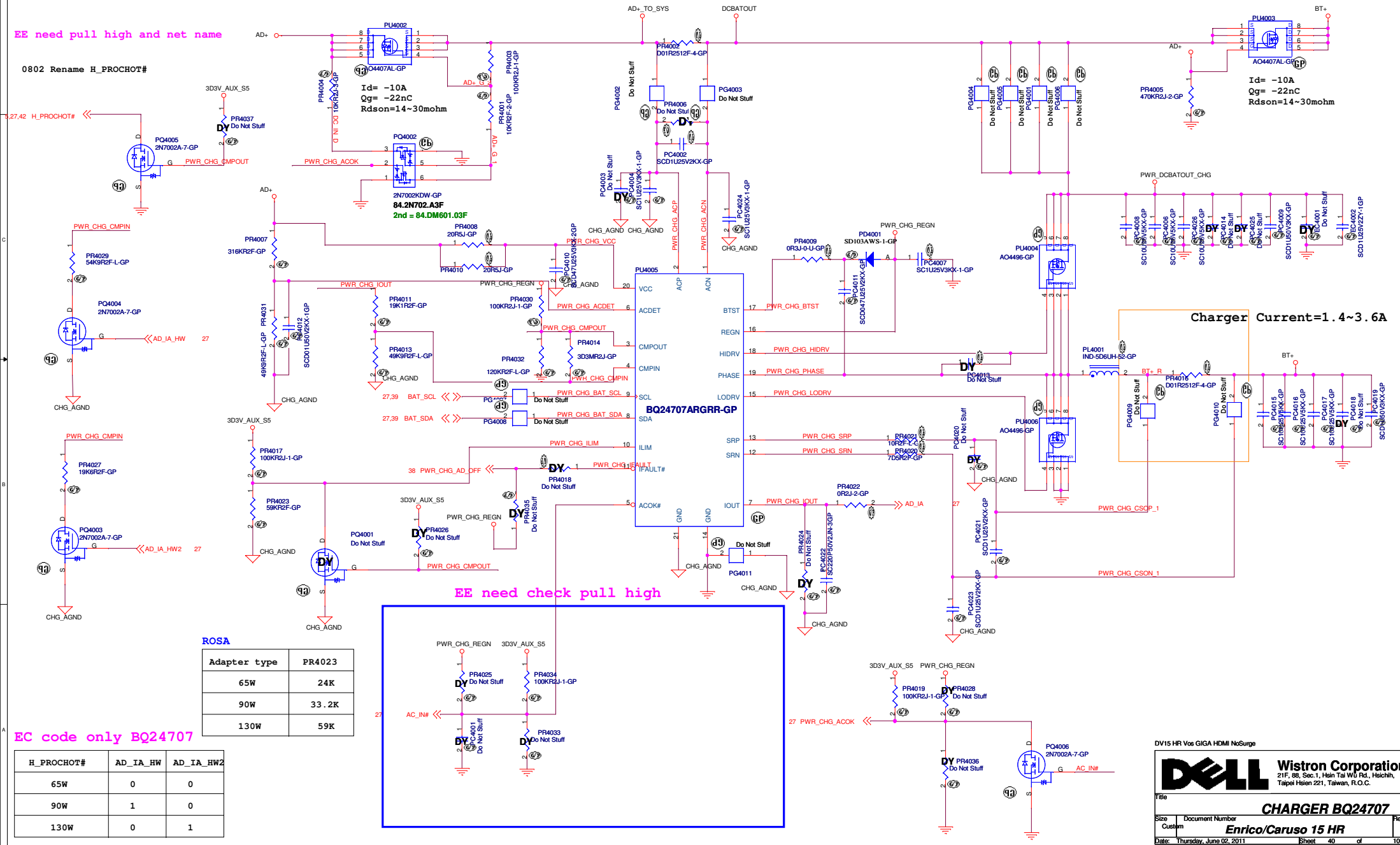

ROSA

Adapter type	PR4023
65W	24K
90W	33.2K
130W	59K

EC code only BQ24707

H_PROCHOT#	AD_IA_HW	AD_IA_HW2
65W	0	0
90W	1	0
130W	0	1

DV15 HR Vos GIGA HDMI NoSurge

Wistron Corporation
21F, 88, Sec.1, Hsin Tai Wu Rd., Hsichih,
Taipei Hsien 221, Taiwan, R.O.C.

Title: CHARGER BQ24707

Size: Custom | Document Number: Enrico/Caruso 15 HR | Rev: X01

Date: Thursday, June 02, 2011 | Sheet 40 of 104

SSID = PWR.Plane.Regulator_5v3p3v

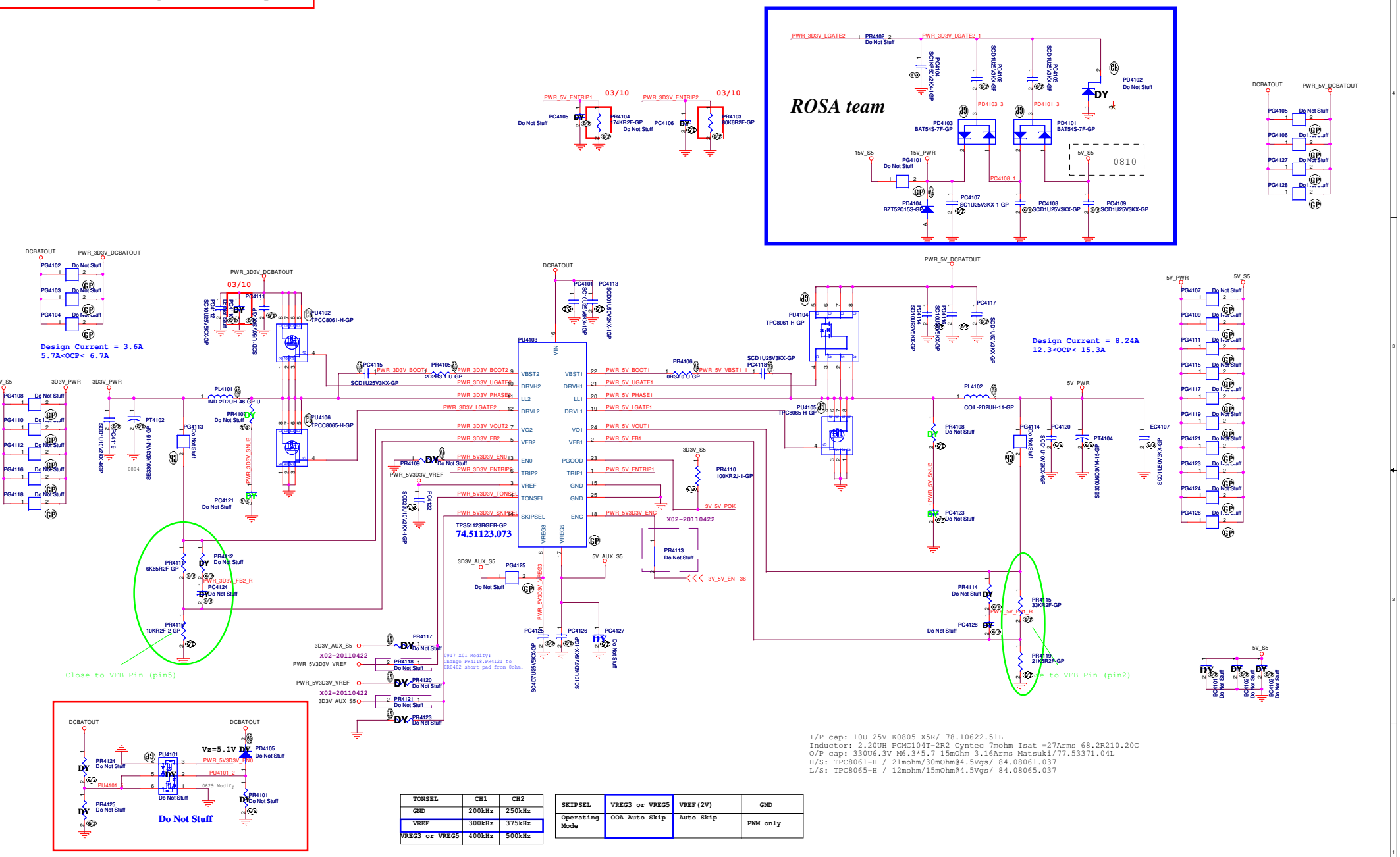

I/P cap: 10U 25V K0805 X5R/ 78.10622.51L
Inductor: 2.20UH PCMC104T-2R2 Cyntec 7mohm Isat =27Arms 68.2R210.20C
O/P cap: 330U6.3V M6.3*5.7 15mOhm 3.16Arms Matsuki/77.53371.04L
H/S: TPC8061-H / 21mohm/30mOhm@4.5Vgs/ 84.08061.037
L/S: TPC8065-H / 12mohm/15mOhm@4.5Vgs/ 84.08065.037

TONSEL	CH1	CH2
GND	200kHz	250kHz
VREF	300kHz	375kHz
VREG3 or VREG5	400kHz	500kHz

SKIPSEL	VREG3 or VREG5	VREF(2V)	GND
Operating Mode	OOA Auto Skip	Auto Skip	PWM only

I/P cap: 10U 25V K0805 X5R/ 78.10622.51L
Inductor: 2.20UH PCMC104T-2R2 Cyntec 7mohm Isat =27Arms 68.2R210.20C
O/P cap: 330U6.3V M6.3*5.7 15mOhm 3.16Arms Matsuki/77.53371.04L
H/S: TPCC8061-H NC 8P / 21mohm/29mOhm@4.5Vgs/ 84.08061.A37
L/S: TPCC8065-H NC 8P / 12.1mohm/17.4mOhm@4.5Vgs/ 84.08065.A37

DV15 HR Vos GIGA HDMI NoSurge

Wistron Corporation
21F, 88, Sec.1, Hsin Tai Wu Rd., Hsichih, Taipei Hsien 221, Taiwan, R.O.C.

Title: 5V/3D3V(TPS51123RGER)

Size: A2 | Document Number: Enrico/Caruso 15 HR | Rev: X01

Date: Thursday, June 02, 2011 | Sheet 41 of 104

SSID = CPU.Regulator

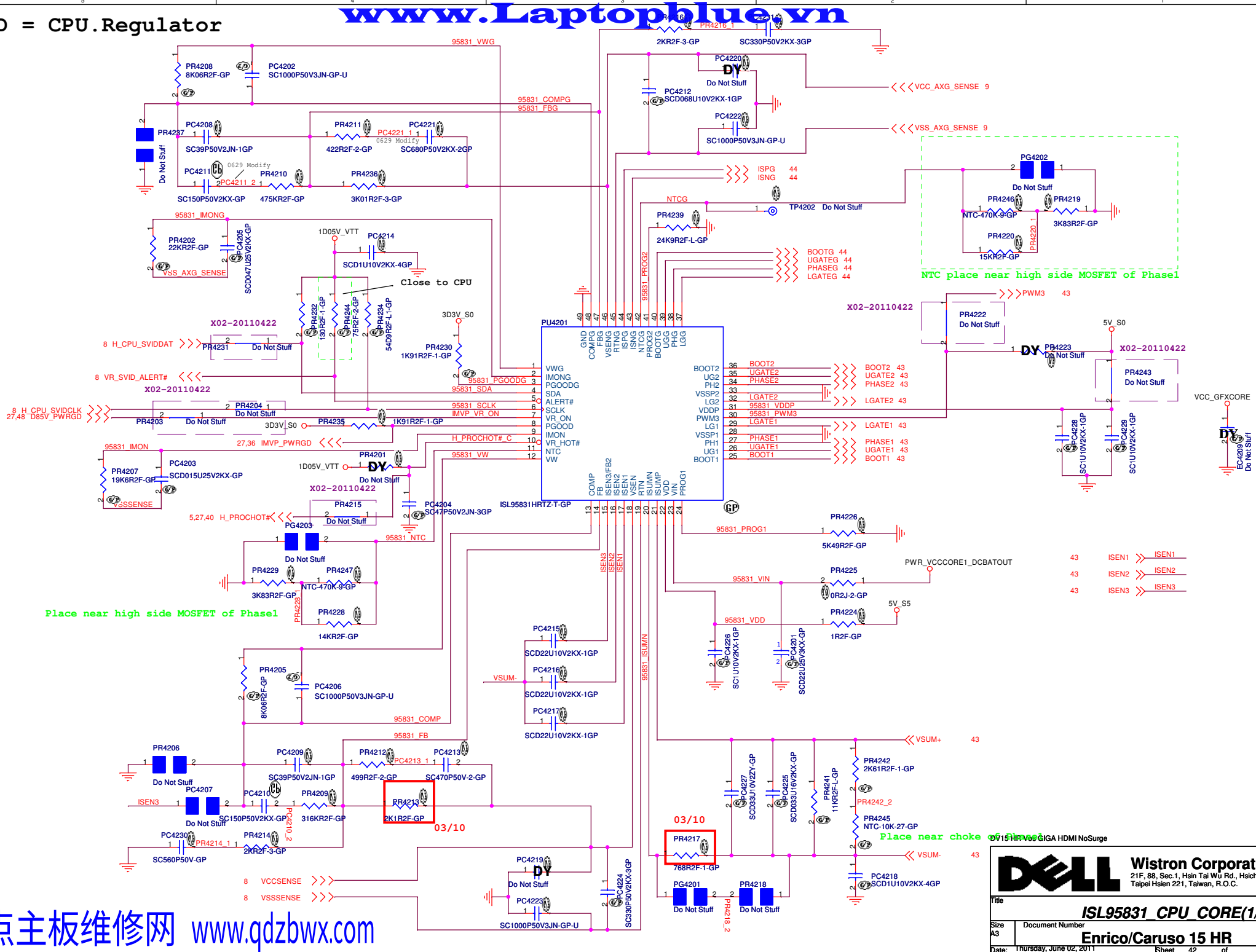

D15 HR Vos GIGA HDMI NoSurge

Wistron Corporation
21F, 88, Sec.1, Hsin Tai Wu Rd., Hsichih,
Taipei Hsien 221, Taiwan, R.O.C.

Title: *ISL95831_CPU_CORE(1/3)*

Size: A3 | Document Number: Enrico/Caruso 15 HR | Rev: X01

Date: Thursday, June 02, 2011 | Sheet 42 of 104

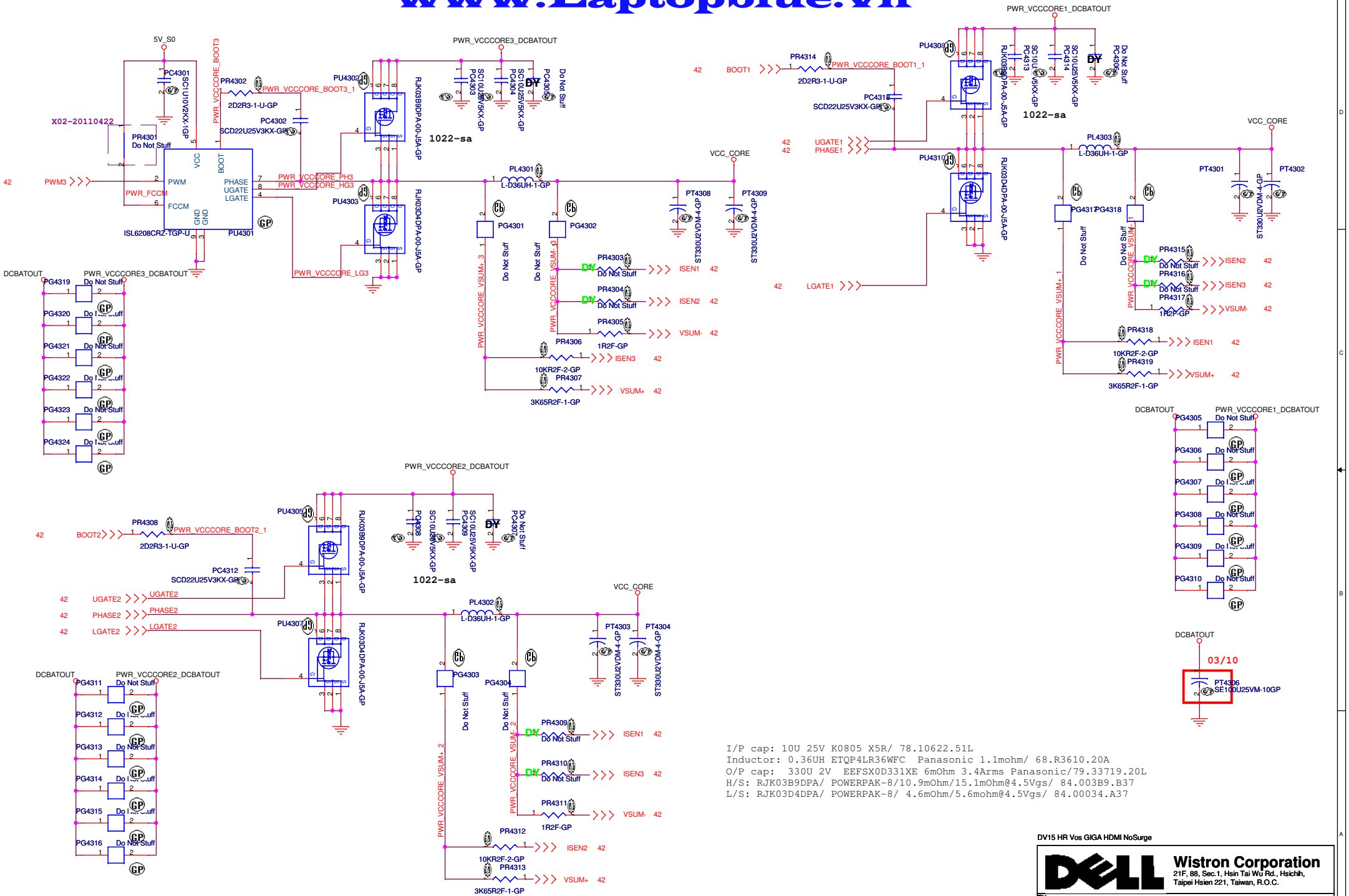

I/P cap: 10U 25V K0805 X5R/ 78.10622.51L
Inductor: 0.36UH ETQP4LR36WFC Panasonic 1.1mohm/ 68.R3610.20A
O/P cap: 330U 2V EEFSX0D331XE 6mOhm 3.4Arms Panasonic/79.33719.20L
H/S: RJK03B9DPA/ POWERPAK-8/10.9mOhm/15.1mOhm@4.5Vgs/ 84.003B9.B37
L/S: RJK03D4DPA/ POWERPAK-8/ 4.6mOhm/5.6mohm@4.5Vgs/ 84.00034.A37

DV15 HR Vos GIGA HDMI NoSurge

Wistron Corporation
21F, 88, Sec.1, Hsin Tai Wu Rd., Hsichih,
Taipei Hsien 221, Taiwan, R.O.C.

Title: ISL95831_CPU_CORE (2 of 3)

Size: Custom | Document Number: Enrico/Caruso 15 HR | Rev: X01

Date: Thursday, June 02, 2011 | Sheet 43 of 104

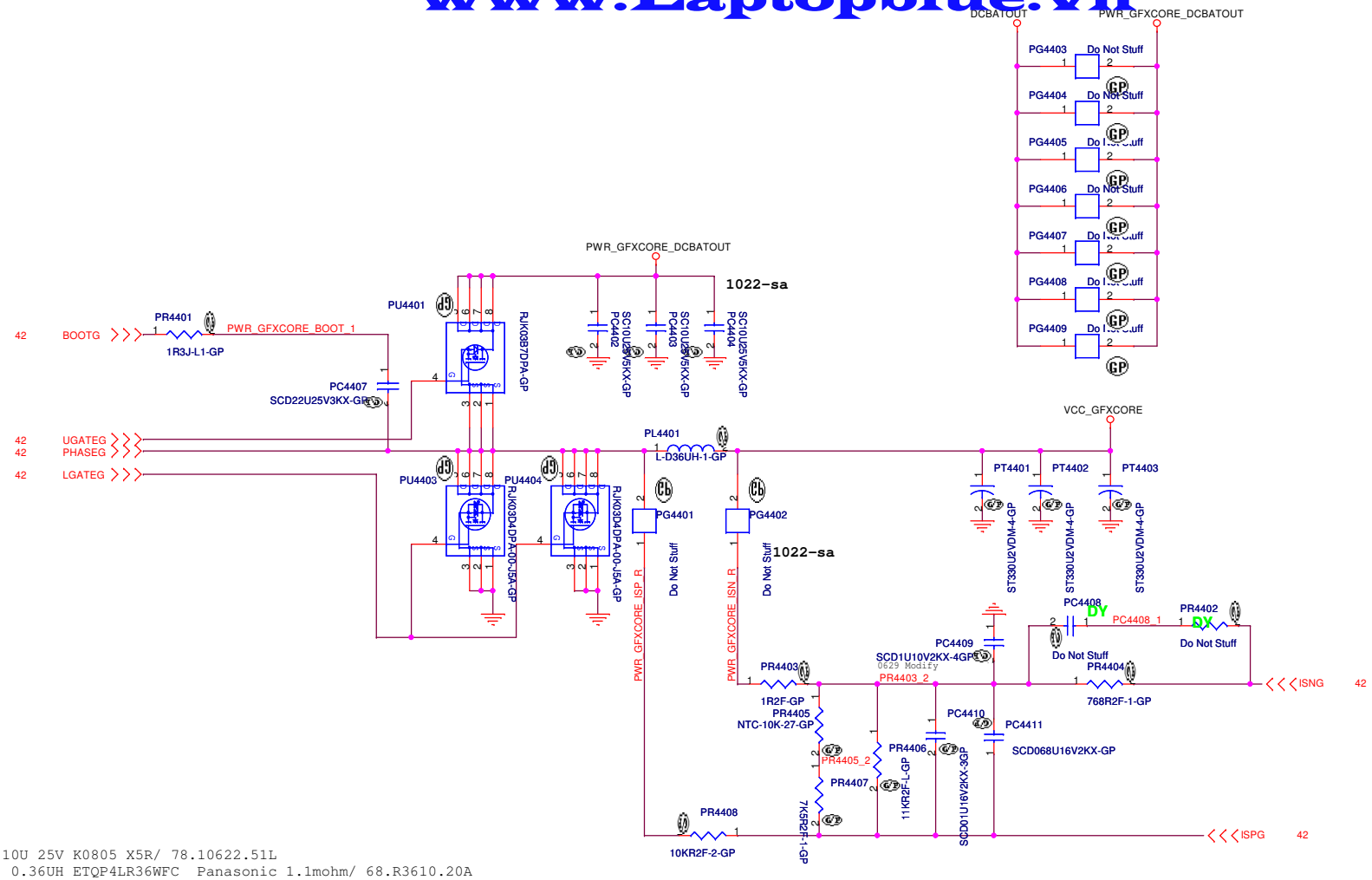

VCC_GFXCORE
Iomax=33A
OCP>50A

I/P cap: 10U 25V K0805 X5R/ 78.10622.51L
Inductor: 0.36UH ETQP4LR36WFC Panasonic 1.1mohm/ 68.R3610.20A
O/P cap: 330U 2V EEFSX0D331XE 6mOhm 3.4Arms Panasonic/79.33719.20L
H/S: RJK03B7DPA NC WPAK 8P/7.7mOhm/10.7mOhm@4.5Vgs/84.003B7.037
L/S: RJK03D4DPA/ POWERPAK-8/ 4.6mOhm/5.6mohm@4.5Vgs/ 84.00034.A37

EMI/ESD

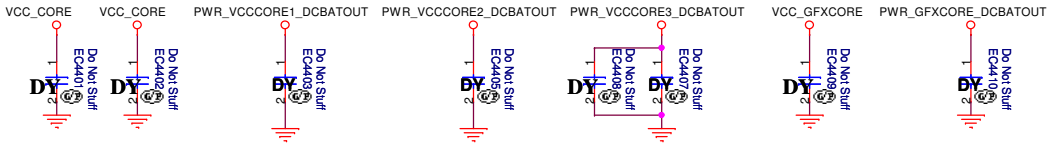

DV15 HR Vos GIGA HDMI NoSurge

Wistron Corporation
21F, 88, Sec.1, Hsin Tai Wu Rd., Hsichih,
Taipei Hsien 221, Taiwan, R.O.C.

Title: ISL95831_CPU_CORE(3/3)

Size: A3 | Document Number: Enrico/Caruso 15 HR | Rev: X01

Date: Thursday, June 02, 2011 | Sheet 44 of 104

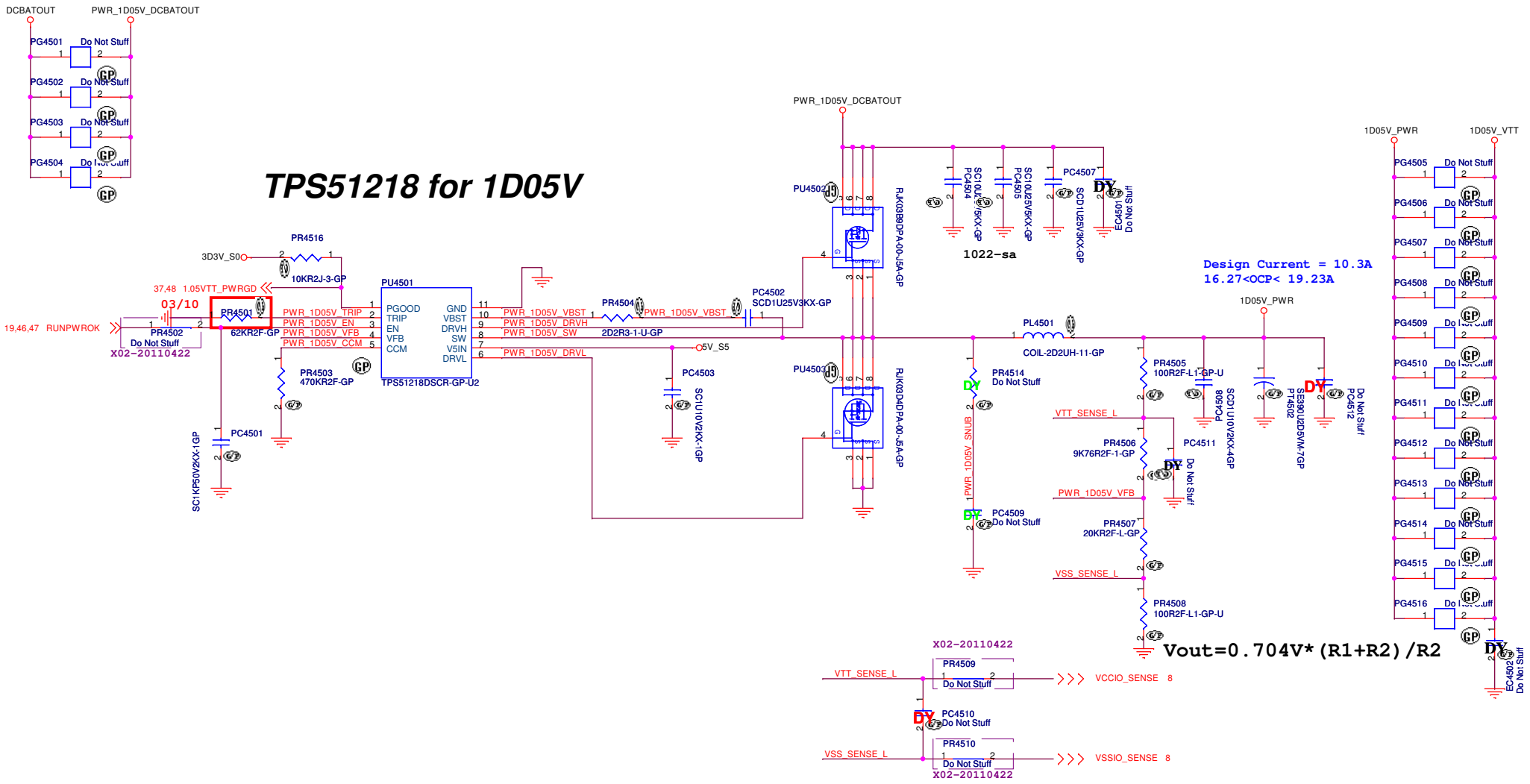

I/P cap: 10U 25V K0805 X5R/ 78.10622.51L
Inductor: 2.20UH PCMC104T-2R2 Cyntec 7mohm Isat =27Arms 68.2R210.20C
O/P cap: 390U 2.5V M 6.3*5.7/ 10mOhm 3.87Arms Matsuki/79.3971V.30L
H/S: RJK03B9DPA/ POWERPAK-8/10.9mOhm/15.1mOhm@4.5Vgs/ 84.003B9.B37
L/S: RJK03D4DPA/ POWERPAK-8/ 4.6mOhm/5.6mohm@4.5Vgs/ 84.00034.A37

DV15 HR Vos GIGA HDMI NoSurge

Wistron Corporation
21F, 88, Sec.1, Hsin Tai Wu Rd., Hsichih,
Taipei Hsien 221, Taiwan, R.O.C.

Title: TPS51218_+1.05V_VTT

Size: A3 | Document Number: Enrico/Caruso 15 HR | Rev: X01

Date: Thursday, June 02, 2011 | Sheet 45 of 104

SSID = PWR.Plane.Regulator 1p5v0p75v

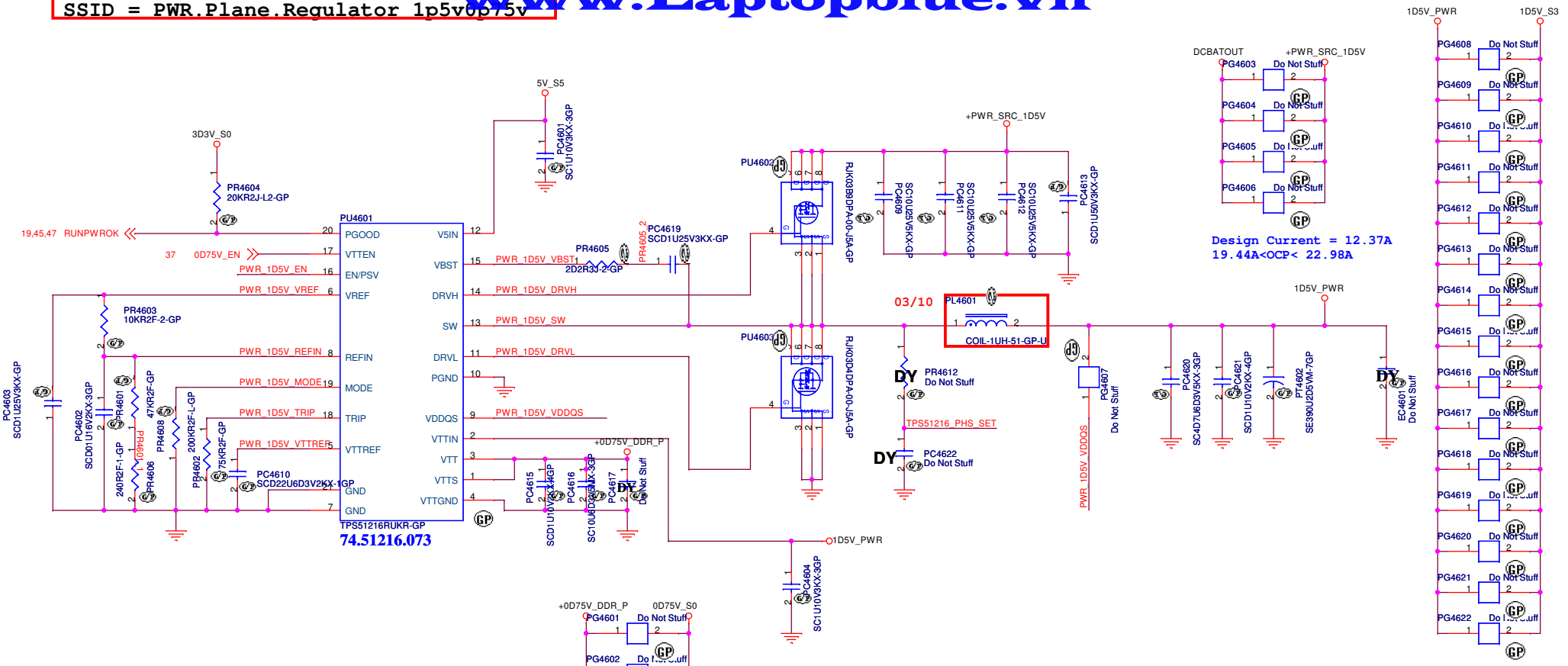

State	S3	S5	VDDR	VTTREF	VTT
S0	Hi	Hi	On	On	On
S3	Lo	Hi	On	On	Off(Hi-Z)
S4/S5	Lo	Lo	Off	Off	Off

MODE

PR4608	Frequency	Discharge Mode
200k ohm	400kHz	Tracking Discharge
100k ohm	300kHz	
68k ohm	300kHz	Non-tracking Discharge
47k ohm	400kHz	

I/P cap: 10U 25V K0805 X5R/ 78.10622.51L
Inductor: 1.0UH PCMB104T-1R0M Cyntec 3mohm Isat =28Arms 68.1R01C.10Q
O/P cap: 390U 2.5V M 6.3*5.7/ 10mOhm 3.87Arms Matsuki/79.3971V.30L
H/S: RJK03B9DPA/ POWERPAK-8/10.9mOhm/15.1mOhm@4.5Vgs/ 84.003B9.B37
L/S: RJK03D4DPA/ POWERPAK-8/ 4.6mOhm/5.6mohm@4.5Vgs/ 84.00034.A37

DV15 HR Vos GIGA HDMI NoSurge

Wistron Corporation
21F, 88, Sec.1, Hsin Tai Wu Rd., Hsichih,
Taipei Hsien 221, Taiwan, R.O.C.

Title: TPS51116_+1.5V_SUS

Size: A3 | Document Number: Enrico/Caruso 15 HR | Rev: X01

Date: Thursday, June 02, 2011 | Sheet 46 of 104

SSID = PWR.Plane.Regulator_1D8V_S0

+1.8V_RUN
Design current = 0.87A

APW7153B for 1D8V_S0

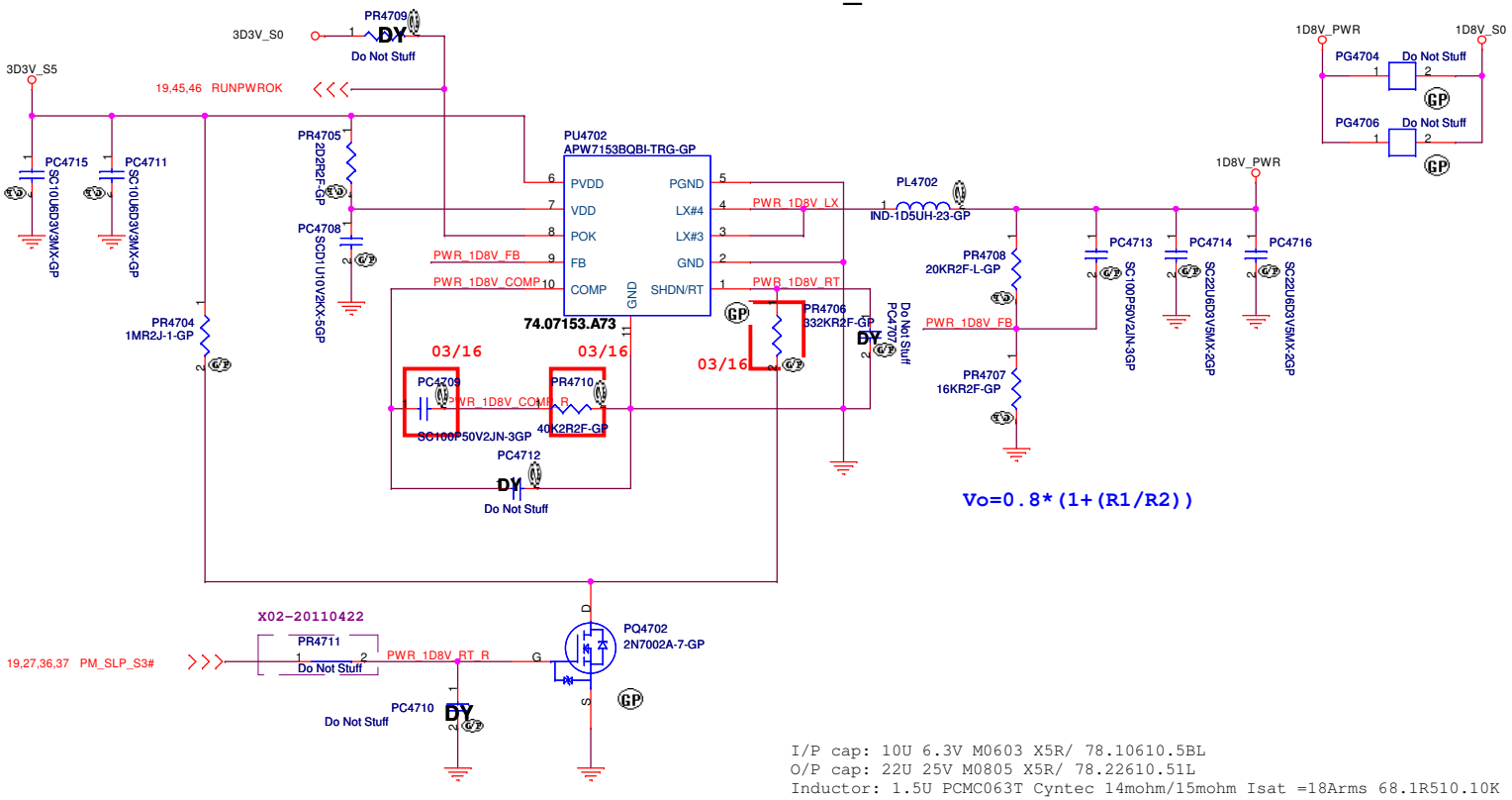

I/P cap: 10U 6.3V M0603 X5R/ 78.10610.5BL
O/P cap: 22U 25V M0805 X5R/ 78.22610.51L
Inductor: 1.5U PCMC063T Cyntec 14mohm/15mohm Isat =18Arms 68.1R510.10K

DV15 HR Vos GIGA HDMI NoSurge

Wistron Corporation
21F, 88, Sec.1, Hsin Tai Wu Rd., Hsichih,
Taipei Hsien 221, Taiwan, R.O.C.

Title: TPS51311 for 1D8V_S0

Size: A3 | Document Number: Enrico/Caruso 15 HR | Rev: X01

Date: Thursday, June 02, 2011 | Sheet 47 of 104

TPS51461 for VCCSA

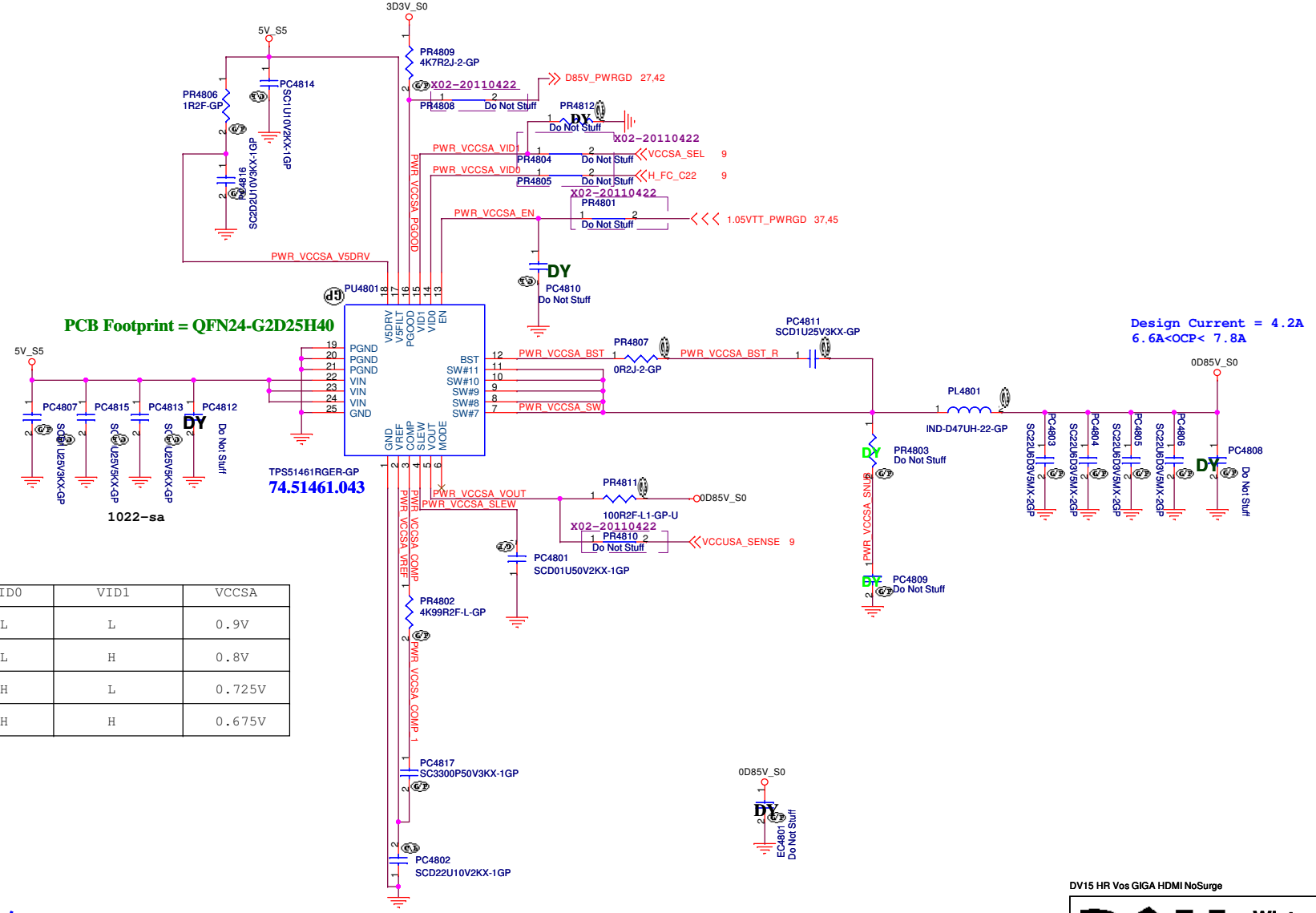

VID0	VID1	VCCSA
L	L	0.9V
L	H	0.8V
H	L	0.725V
H	H	0.675V

DV15 HR Vos GIGA HDMI NoSurge

Wistron Corporation
21F, 88, Sec.1, Hsin Tai Wu Rd., Hsichih,
Taipei Hsien 221, Taiwan, R.O.C.

Title: TPS51461_VCCSA

Size: A3 | Document Number: Enrico/Caruso 15 HR | Rev: X01

Date: Thursday, June 02, 2011 | Sheet 48 of 104

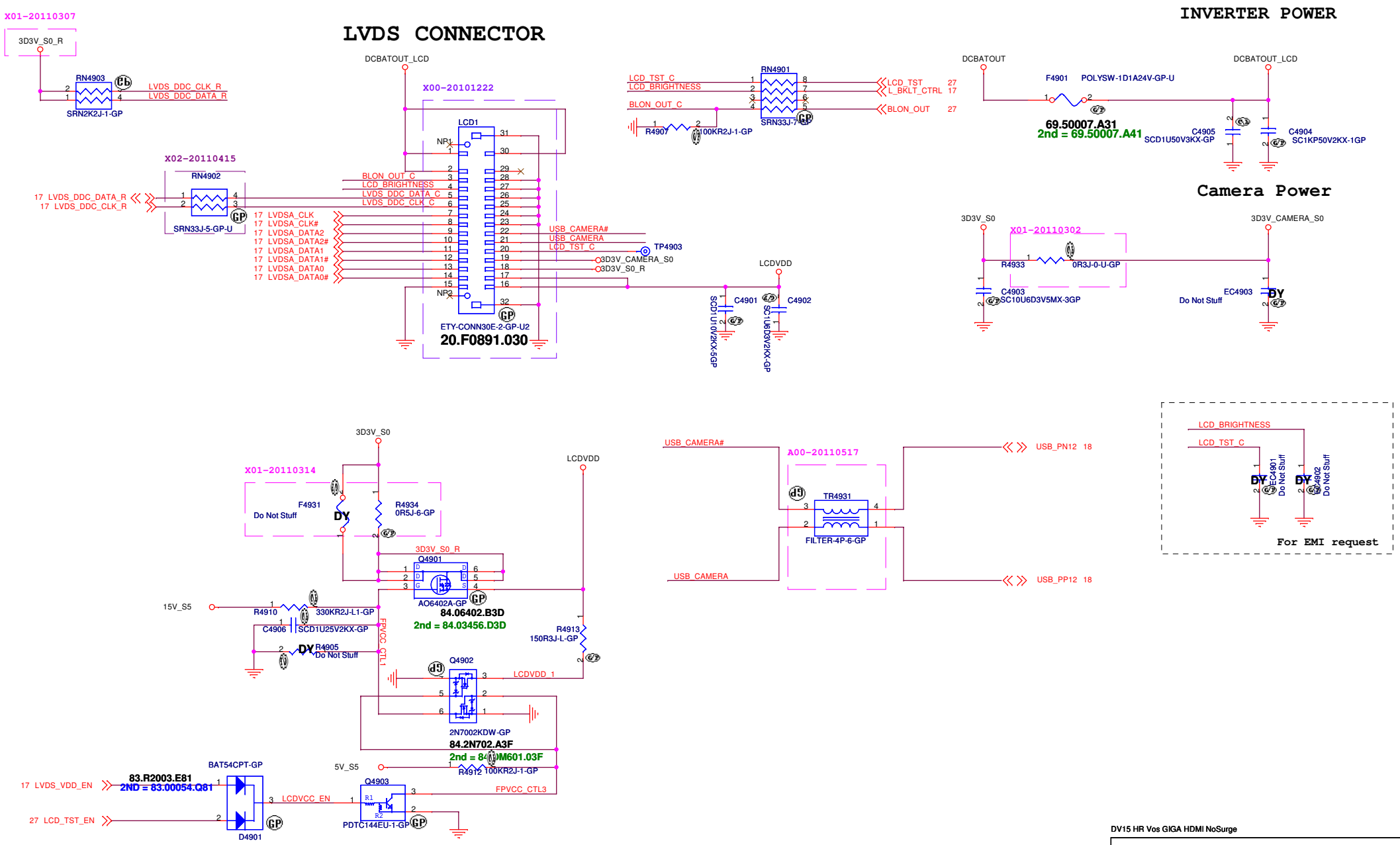

DV15 HR Vos GIGA HDMI NoSurge

Wistron Corporation
21F, 88, Sec.1, Hsin Tai Wu Rd., Hsichih,
Taipei Hsien 221, Taiwan, R.O.C.

Title: LCD Connector

Size: A3 | Document Number: Enrico/Caruso 15 HR | Rev: X01

Date: Thursday, June 02, 2011 | Sheet 49 of 104

SSID = VIDEO

Layout Note:

*Pi-filter & 150 Ohm pull-down resistors should be as close as to CRT CONN.
* RGB signal will hit 75 Ohm first, then pi-filter, finally CRT CONN.

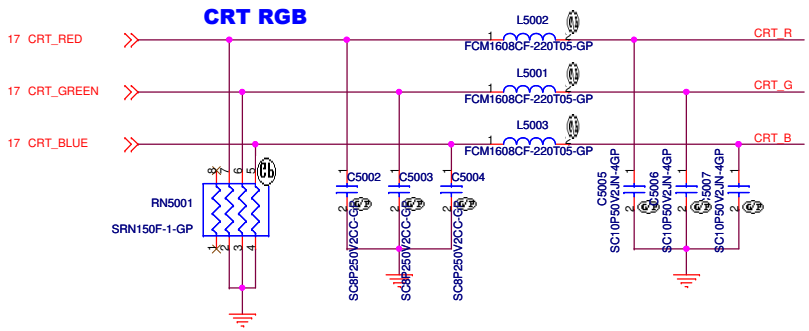

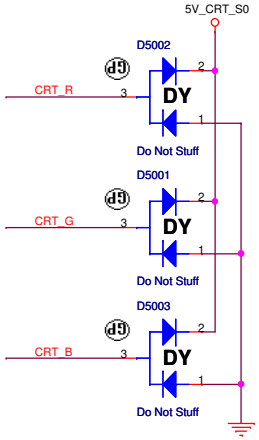

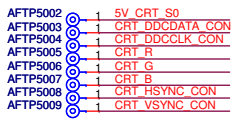

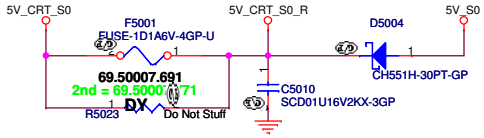

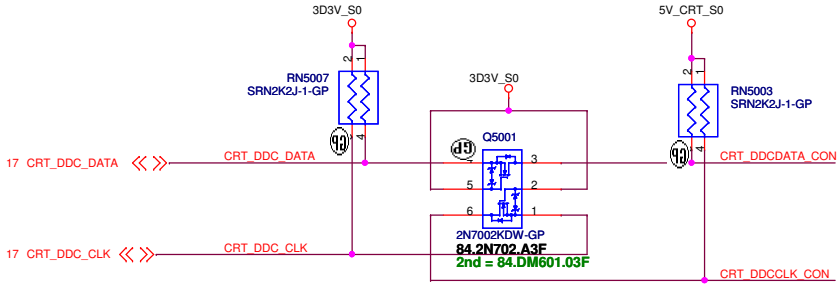

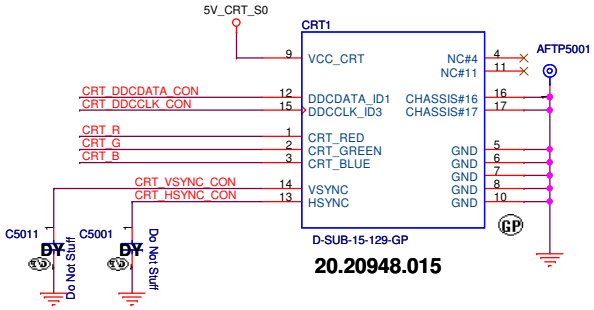

Hsync & Vsync

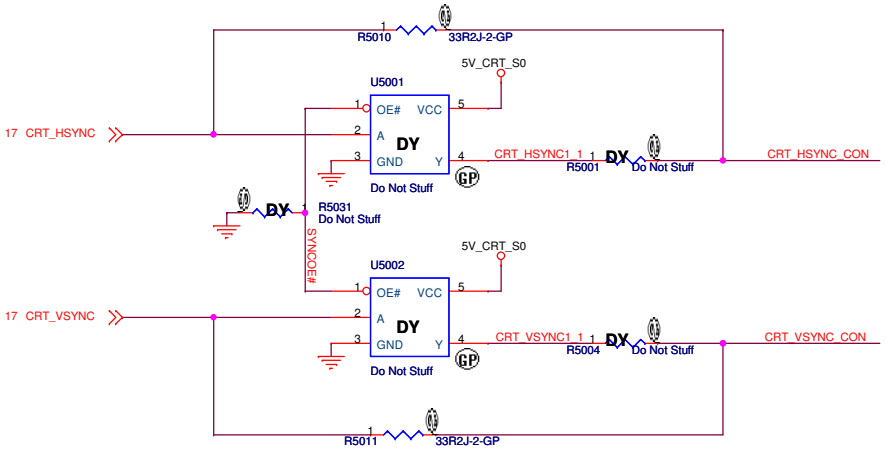

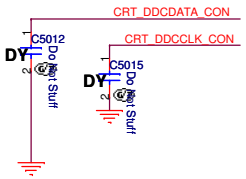

DV15 HR Vos GIGA HDMI NoSurge

Wistron Corporation
21F, 88, Sec.1, Hsin Tai Wu Rd., Hsichih,
Taipei Hsien 221, Taiwan, R.O.C.

Title: ***CRT Connector***

Size	Document Number	Rev
Custom	Enrico/Caruso 15 HR	X01

Date: Thursday, June 02, 2011 Sheet 50 of 104

SSID = VIDEO

HDMI CONN

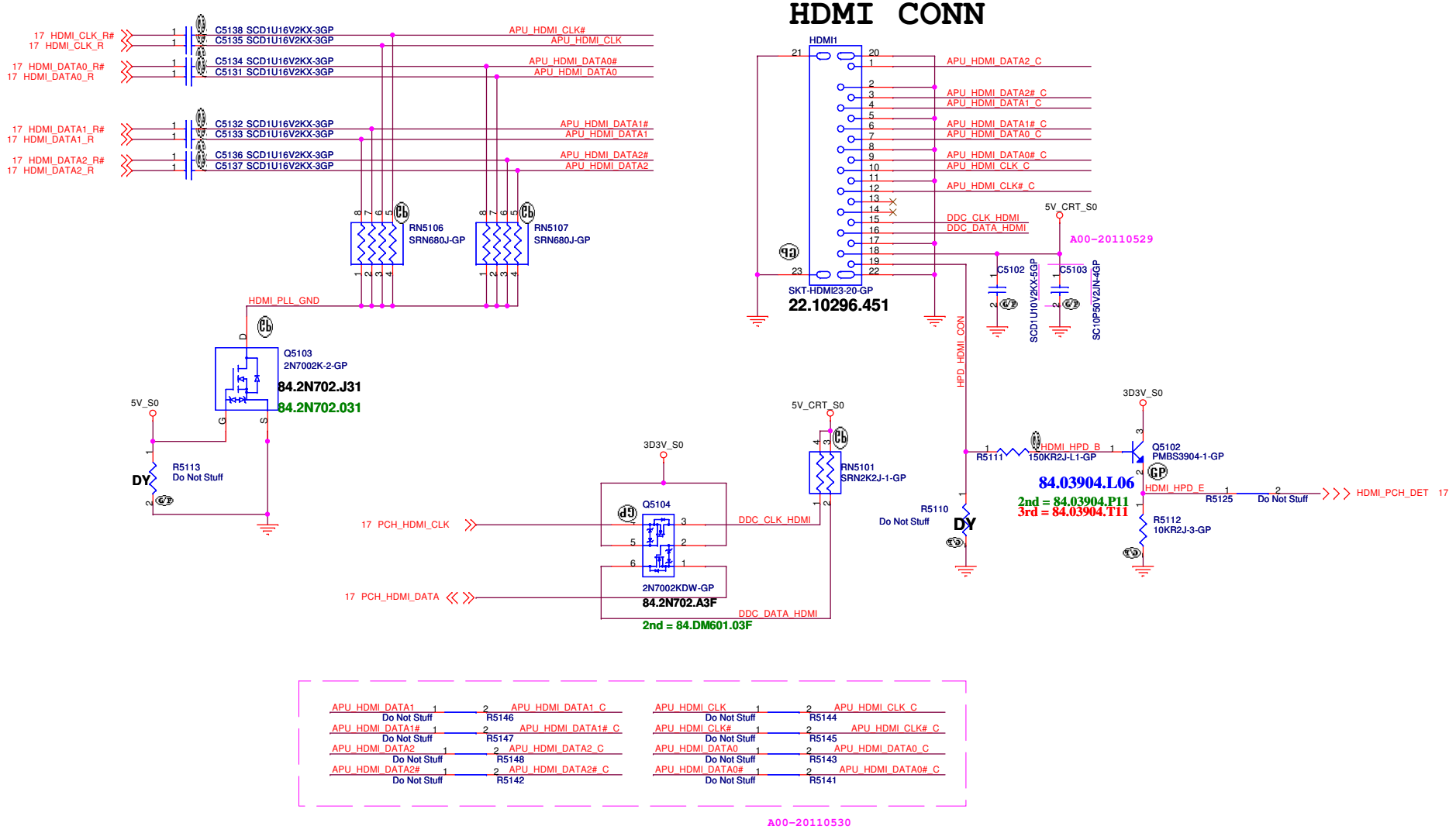

DV15 HR Vos GIGA HDMI NoSurge

Wistron Corporation
21F, 88, Sec.1, Hsin Tai Wu Rd., Hsichih,
Taipei Hsien 221, Taiwan, R.O.C.

Title: HDMI Level Shifter/Connector

Size: A3 | Document Number: Enrico/Caruso 15 HR | Rev: X01

Date: Thursday, June 02, 2011 | Sheet 51 of 104

(Blanking)

DV15 HR Vos GIGA HDMI NoSurge

Wistron Corporation
21F, 88, Sec.1, Hsin Tai Wu Rd., Hsichih,
Taipei Hsien 221, Taiwan, R.O.C.

Title	Reserved	
Size A3	Document Number Enrico/Caruso 15 HR	Rev X01
Date: Thursday, June 02, 2011	Sheet 52 of 104	

(Blanking)

DV15 HR Vos GIGA HDMI NoSurge

Wistron Corporation
21F, 88, Sec.1, Hsin Tai Wu Rd., Hsichih,
Taipei Hsien 221, Taiwan, R.O.C.

Title: LVDS_Switch

Size: A3 | Document Number: Enrico/Caruso 15 HR | Rev: X01

Date: Thursday, June 02, 2011 | Sheet 53 of 104

(Blanking)

DV15 HR Vos GIGA HDMI NoSurge

Wistron Corporation
21F, 88, Sec.1, Hsin Tai Wu Rd., Hsichih,
Taipei Hsien 221, Taiwan, R.O.C.

Title: Reserved

Size: A3 | Document Number: Enrico/Caruso 15 HR | Rev: X01

Date: Thursday, June 02, 2011 | Sheet 54 of 104

SSID = User.Interface

(Blanking)

DV15 HR Vos GIGA HDMI NoSurge

Wistron Corporation
21F, 88, Sec.1, Hsin Tai Wu Rd., Hsichih,
Taipei Hsien 221, Taiwan, R.O.C.

Title: ITP/Fan Connector

Size: A3 | Document Number: Enrico/Caruso 15 HR | Rev: X01

Date: Thursday, June 02, 2011 | Sheet 55 of 104

SSID = SATA

SATA HDD Connector

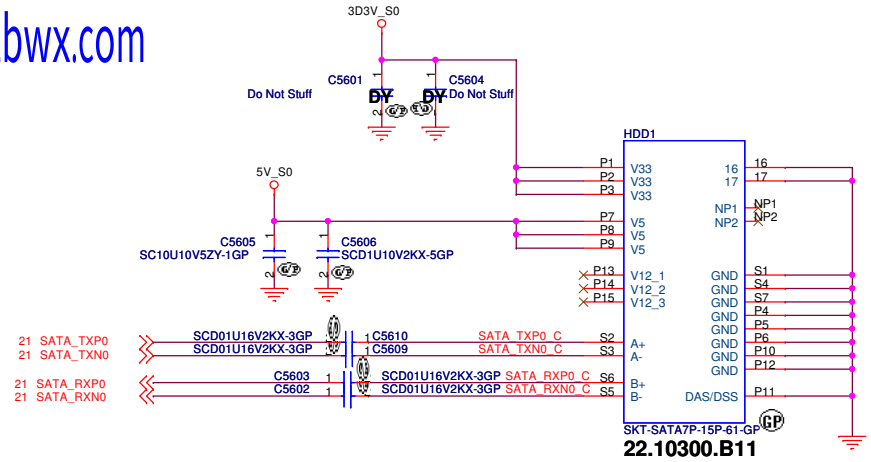

ODD Connector

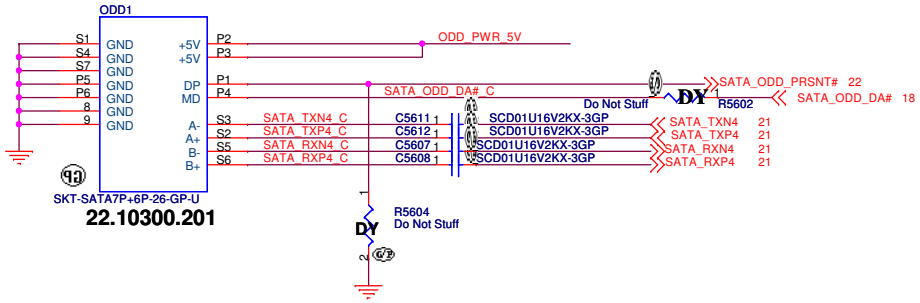

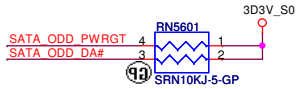

SUPPORT ZERO SATA ODD

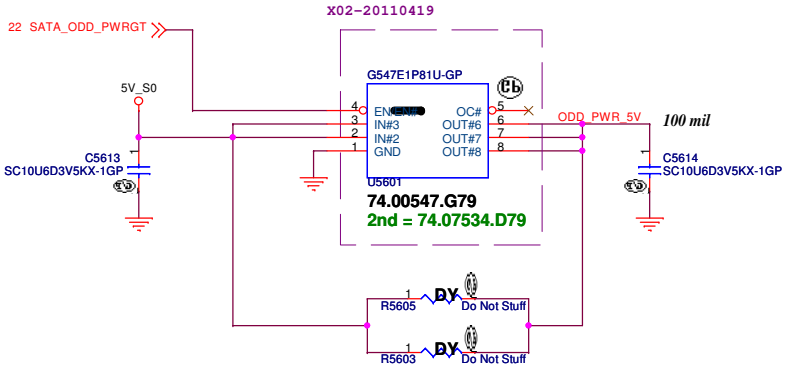

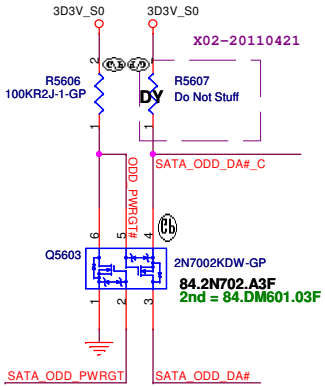

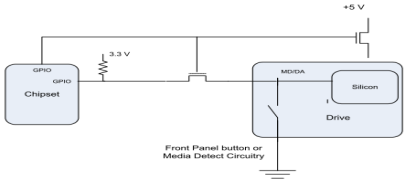

When the drive is powered on, the FET to the MD/DA pin drive is OFF.
When the drive is powered off, the FET to the MD/DA pin is ON

DV15 HR Vos GIGA HDMI NoSurge

Wistron Corporation
21F, 88, Sec.1, Hsin Tai Wu Rd., Hsichih,
Taipei Hsien 221, Taiwan, R.O.C.

Title: HDD/ODD

Size: A3 | Document Number: Enrico/Caruso 15 HR | Rev: X01

Date: Thursday, June 02, 2011 | Sheet 56 of 104

SSID = ESATA

DV15 HR Vos GIGA HDMI NoSurge

Wistron Corporation
21F, 88, Sec.1, Hsin Tai Wu Rd., Hsichih,
Taipei Hsien 221, Taiwan, R.O.C.

Title	ESATA	
Size A3	Document Number Enrico/Caruso 15 HR	Rev X01
Date: Thursday, June 02, 2011	Sheet 57 of 104	

SSID = AUDIO

Speaker Connector

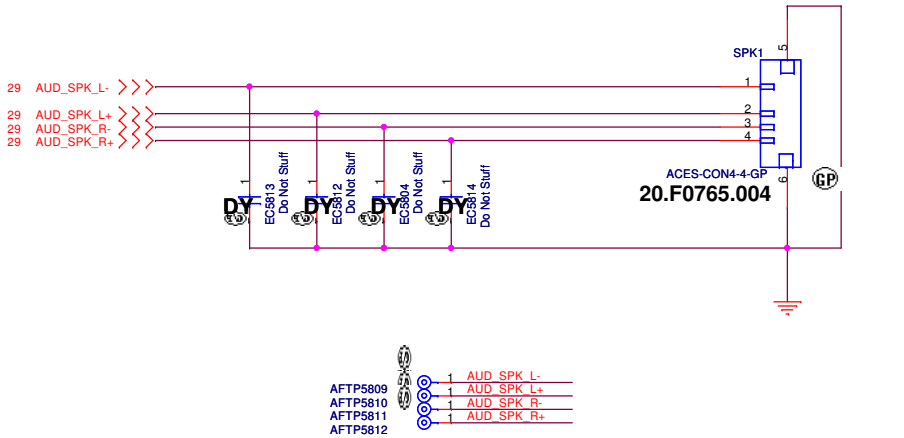

LINE1 OUT

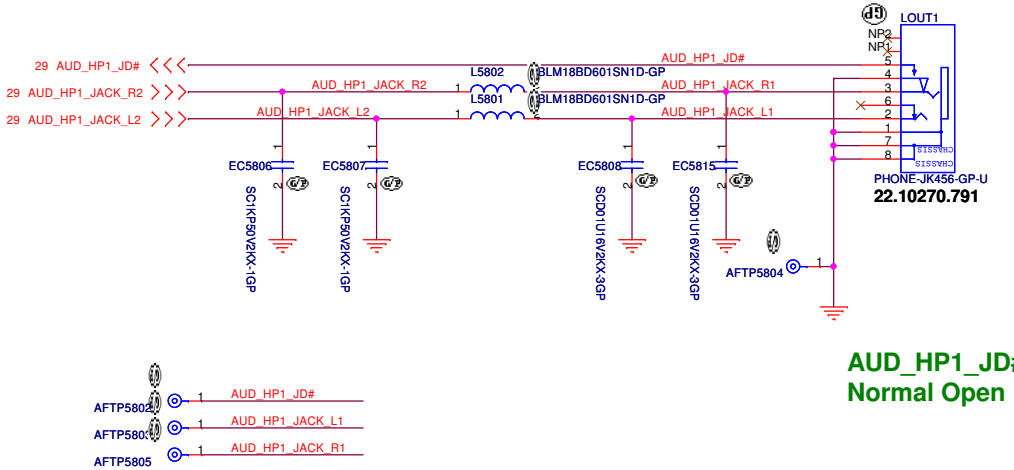

AUD_HP1_JD#
Normal Open

MIC IN

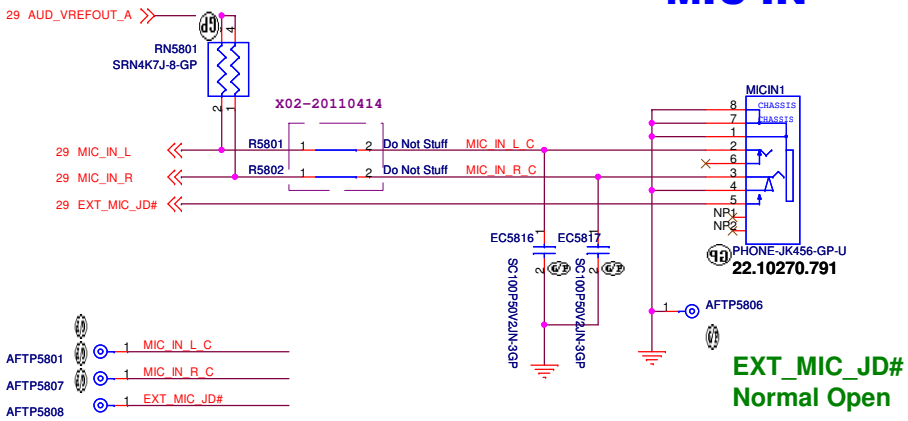

EXT_MIC_JD#
Normal Open

Internal Microphone

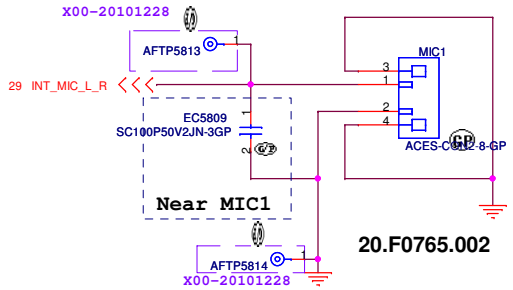

DV15 HR Vos GIGA HDMI NoSurge

Wistron Corporation
21F, 88, Sec.1, Hsin Tai Wu Rd., Hsichih,
Taipei Hsien 221, Taiwan, R.O.C.

Title: SPEAKER CONN

Size: A3 | Document Number: Enrico/Caruso 15 HR | Rev: X01

Date: Thursday, June 02, 2011 | Sheet 58 of 104

1.route on bottom as differential pairs.
2.Tx+/Tx- are pairs. Rx+/Rx- are pairs.
3.No vias, No 90 degree bends.
4.pairs must be equal lengths.
5.6mil trace width,12mil separation.
6.36mil between pairs and any other trace.
7.Must not cross ground moat,except
RJ-45 moat.

10/100M Lan Transformer

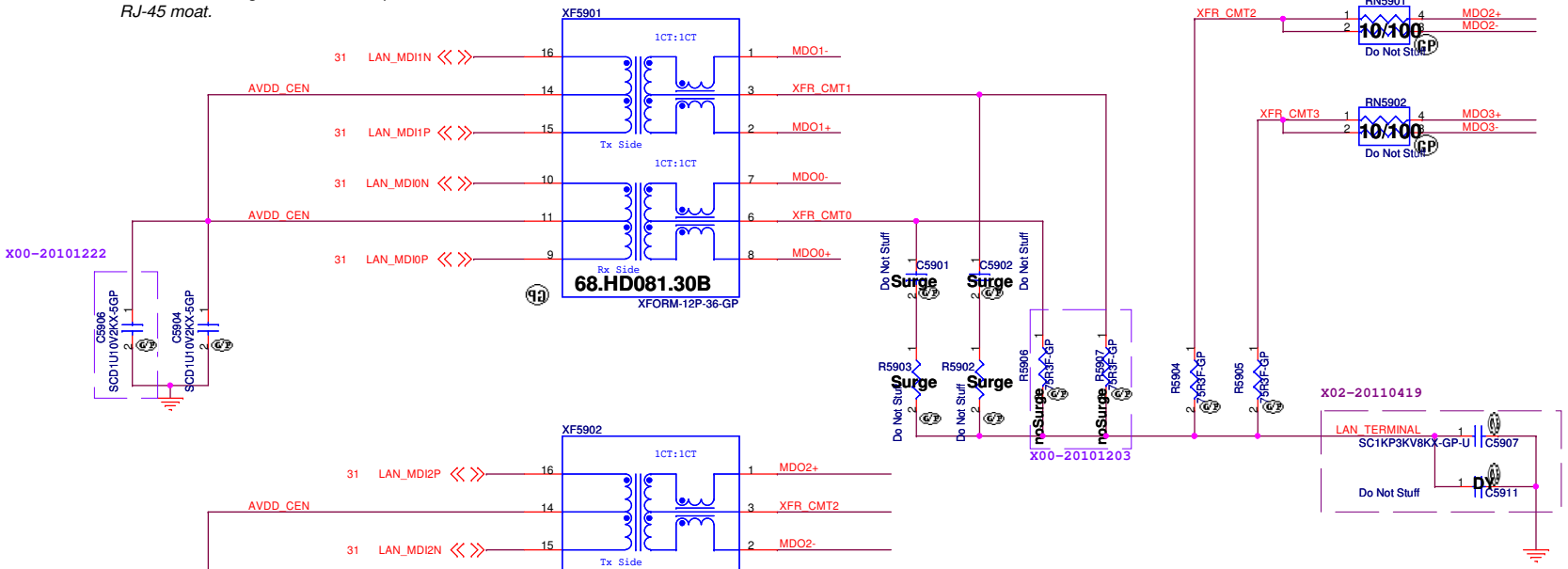

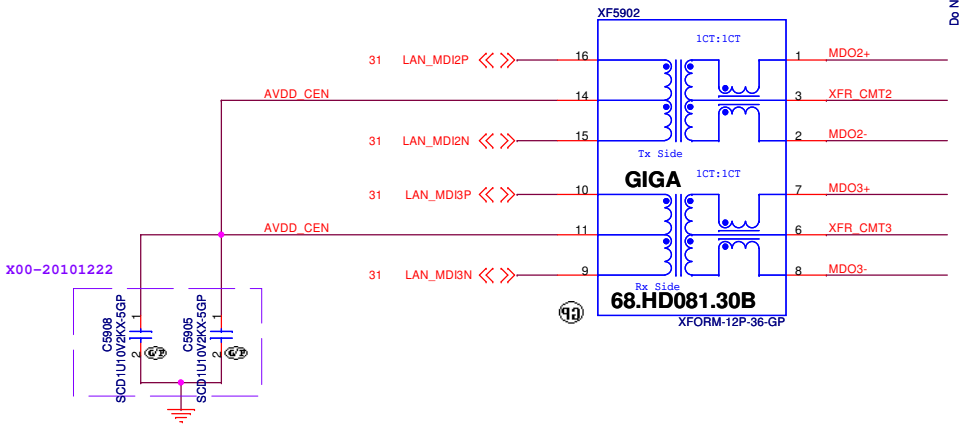

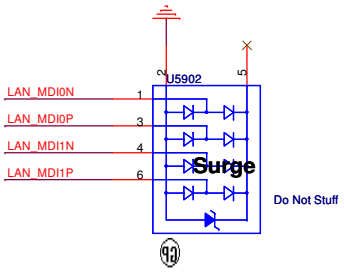

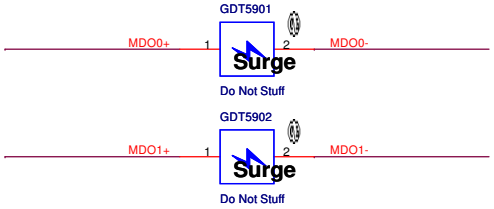

RJ45 Connector

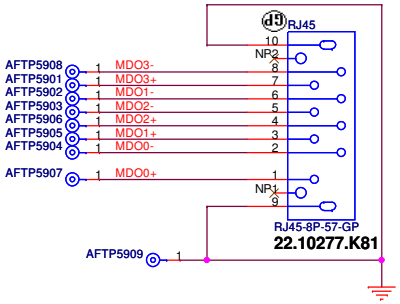

DV15 HR Vos GIGA HDMI NoSurge

Wistron Corporation
21F, 88, Sec.1, Hsin Tai Wu Rd., Hsichih,
Taipei Hsien 221, Taiwan, R.O.C.

Title: Reserved

Size: A3 | Document Number: Enrico/Caruso 15 HR | Rev: X01

Date: Thursday, June 02, 2011 | Sheet 59 of 104

SSID = Flash.ROM

SPI FLASH ROM (4M byte) for PCH

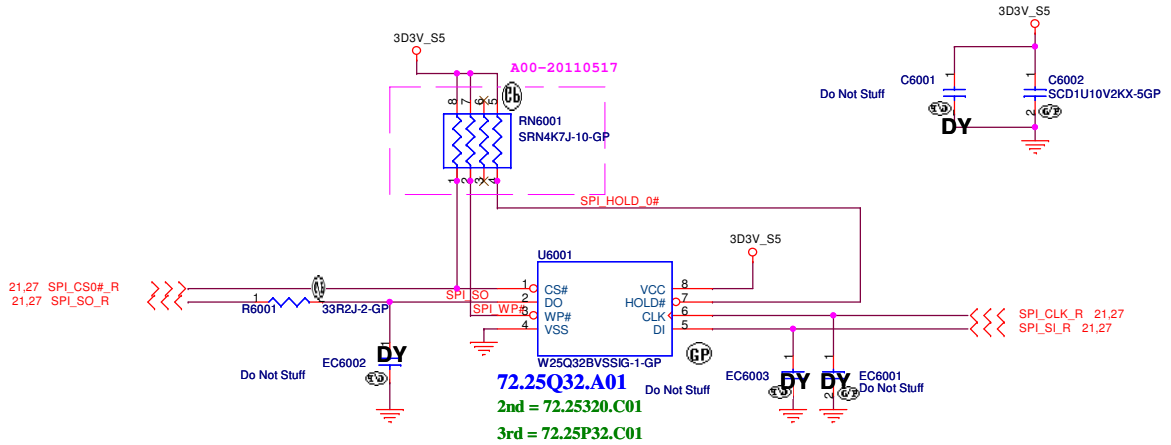

SSID = RBATT

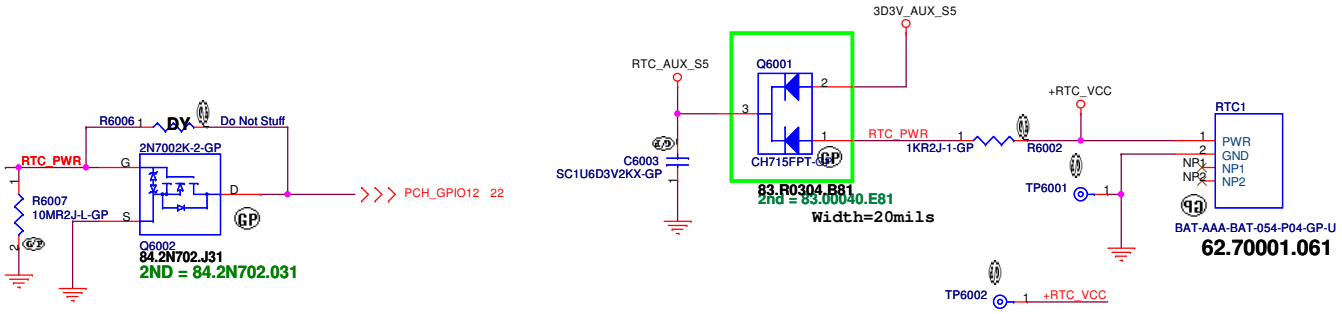

DV15 HR Vos GIGA HDMI NoSurge

Wistron Corporation
21F, 88, Sec.1, Hsin Tai Wu Rd., Hsichih,
Taipei Hsien 221, Taiwan, R.O.C.

Title: Flash/RTC

Size: A3 | Document Number: Enrico/Caruso 15 HR | Rev: X01

Date: Thursday, June 02, 2011 | Sheet 60 of 104

SSID = USB

Left USB Power x1

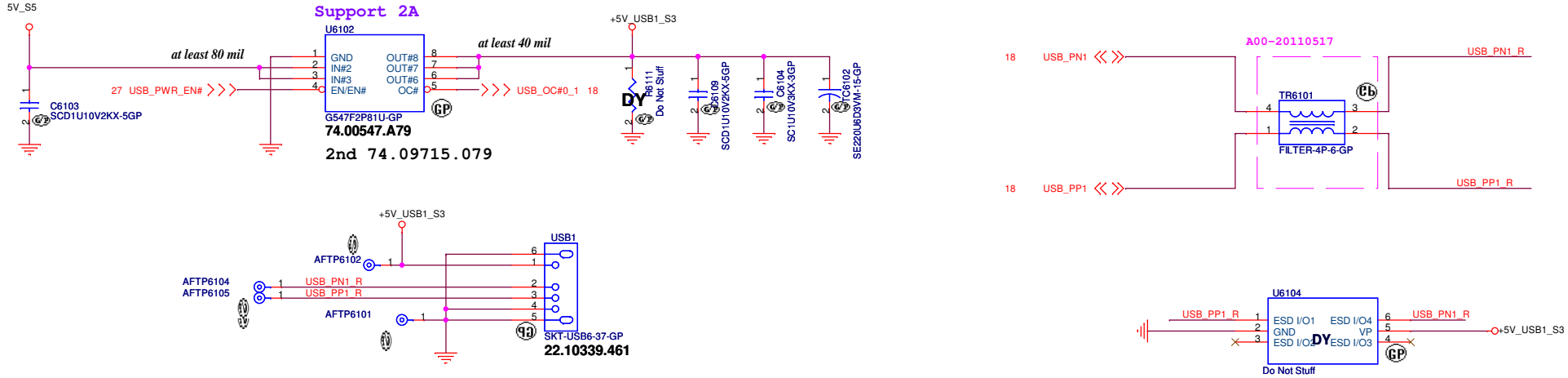

Right USB Power x2

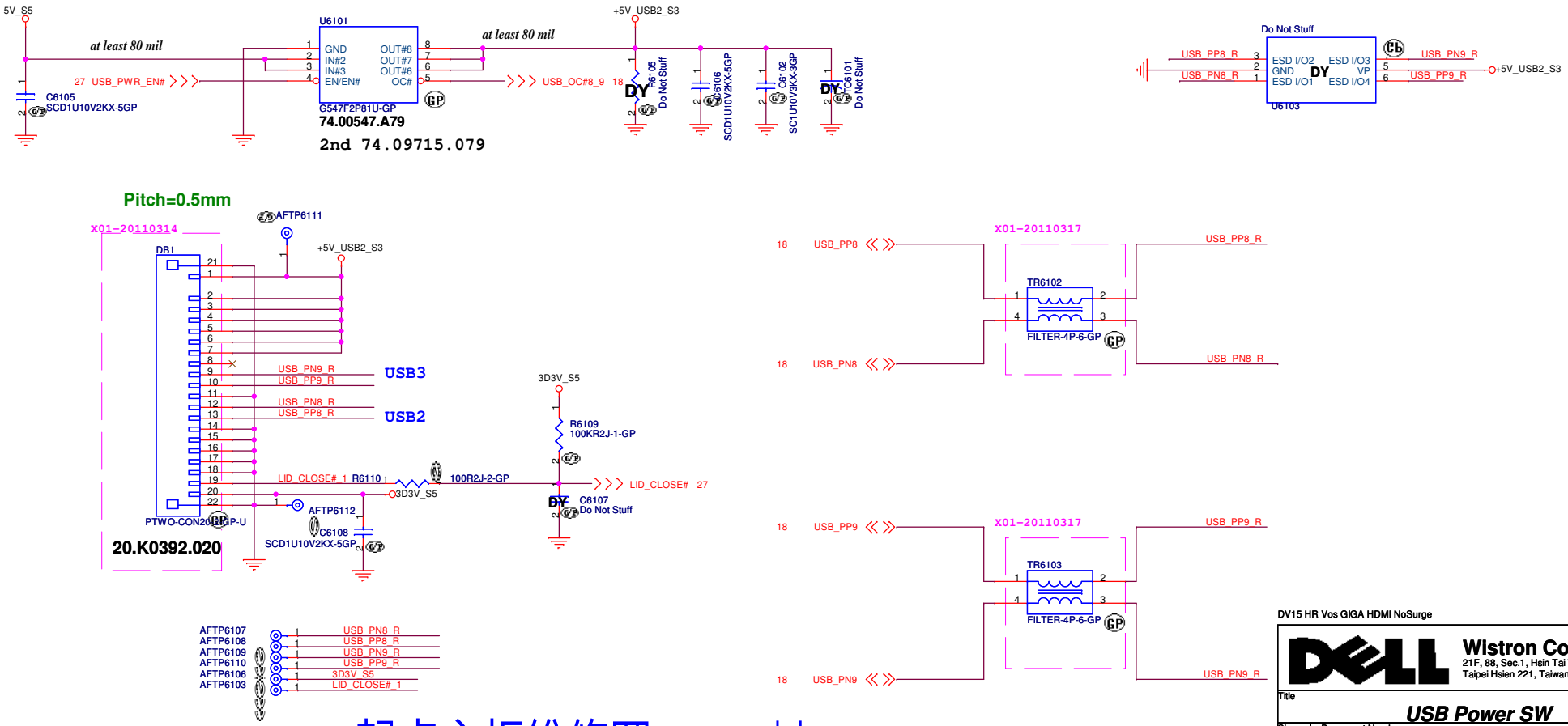

DV15 HR Vos GIGA HDMI NoSurge

Wistron Corporation
21F, 88, Sec.1, Hsin Tai Wu Rd., Hsichih,
Taipei Hsien 221, Taiwan, R.O.C.

Title: USB Power SW

Size | Document Number: Enrico/Caruso 15 HR | Rev: X01

Date: Thursday, June 02, 2011 | Sheet 61 of 104

DV15 HR Vos GIGA HDMI NoSurge

Wistron Corporation
21F, 88, Sec.1, Hsin Tai Wu Rd., Hsichih,
Taipei Hsien 221, Taiwan, R.O.C.

Title: **Reserved**

Size	Document Number	Rev
A3	Enrico/Caruso 15 HR	X01

Date: Thursday, June 02, 2011 Sheet 62 of 104

SSID = User.Interface

DV15 HR Vos GIGA HDMI NoSurge

Wistron Corporation
21F, 88, Sec.1, Hsin Tai Wu Rd., Hsichih,
Taipei Hsien 221, Taiwan, R.O.C.

Title: **Bluetooth**

Size	Document Number	Rev
A3	Enrico/Caruso 15 HR	X01

Date: Thursday, June 02, 2011 Sheet 63 of 104

DV15 HR Vos GIGA HDMI NoSurge

Wistron Corporation
21F, 88, Sec.1, Hsin Tai Wu Rd., Hsichih,
Taipei Hsien 221, Taiwan, R.O.C.

Title: RESERVED

Size: A3 | Document Number: Enrico/Caruso 15 HR | Rev: X01

Date: Thursday, June 02, 2011 | Sheet 64 of 104

SSID = Wireless

Mini Card Connector(802.11b/g/n)

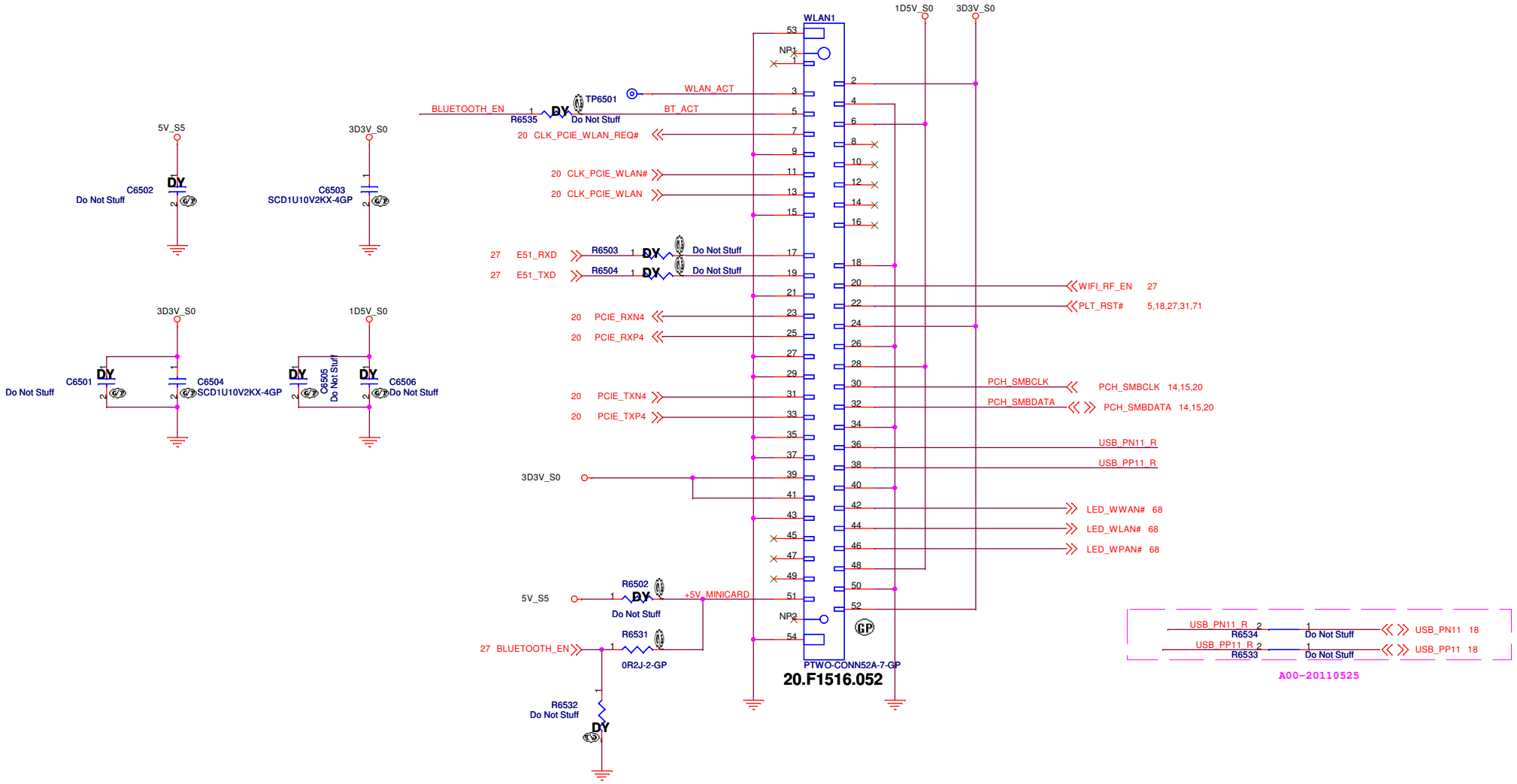

DV15 HR Vos GIGA HDMI NoSurge

Wistron Corporation
21F, 88, Sec.1, Hsin Tai Wu Rd., Hsichih,
Taipei Hsien 221, Taiwan, R.O.C.

Title: RESERVED

Size: A3 | Document Number: Enrico/Caruso 15 HR | Rev: X01

Date: Thursday, June 02, 2011 | Sheet 65 of 104

(Blanking)

DV15 HR Vos GIGA HDMI NoSurge

Wistron Corporation
21F, 88, Sec.1, Hsin Tai Wu Rd., Hsichih,
Taipei Hsien 221, Taiwan, R.O.C.

Title: Reserved

Size: A3 | Document Number: Enrico/Caruso 15 HR | Rev: X01

Date: Thursday, June 02, 2011 | Sheet 66 of 104

(Blanking)

DV15 HR Vos GIGA HDMI NoSurge

Wistron Corporation
21F, 88, Sec.1, Hsin Tai Wu Rd., Hsichih,
Taipei Hsien 221, Taiwan, R.O.C.

Title: Reserved

Size: A3 | Document Number: Enrico/Caruso 15 HR | Rev: X01

Date: Thursday, June 02, 2011 | Sheet 67 of 104

SSID = User.Interface

Power BTN Connector

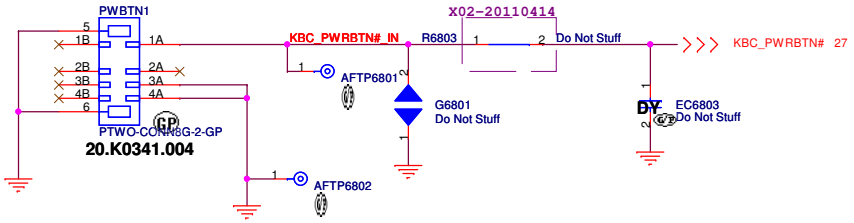

Power LED

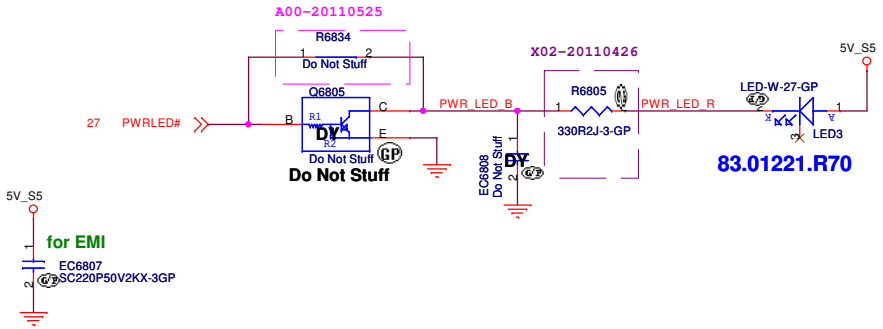

Battery LED

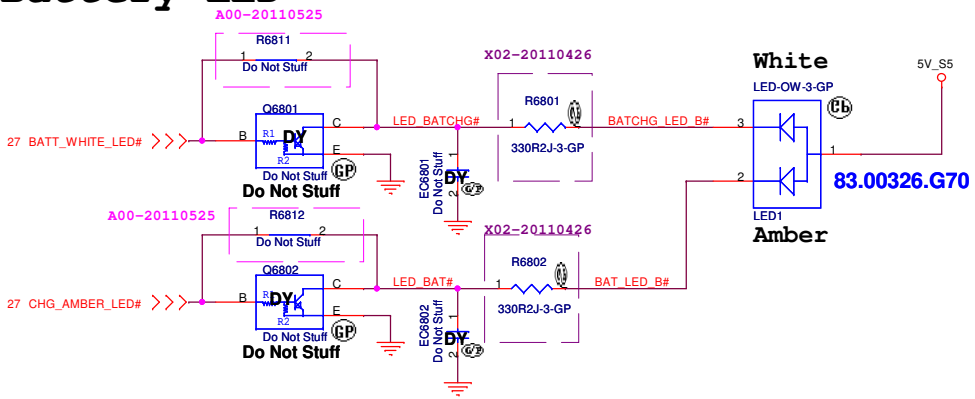

WLAN_LED

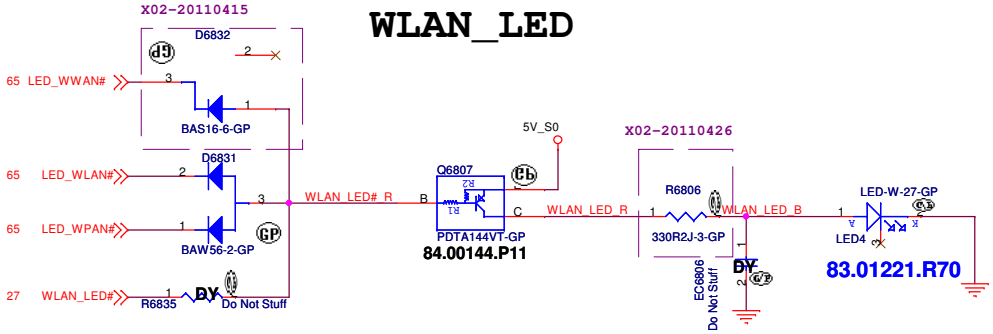

HDD LED

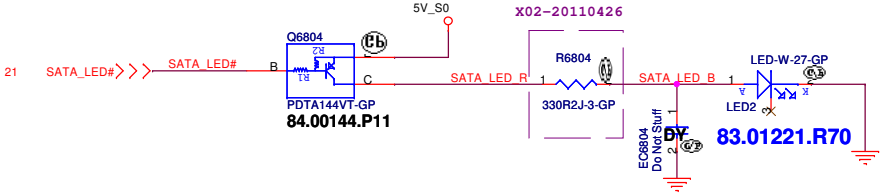

LED Location from left to right
(MB, Top View)

LED3	LED2	LED1	LED4
PWR	HDD	Battery	WiFi

DV15 HR Vos GIGA HDMI NoSurge

Wistron Corporation
21F, 88, Sec.1, Hsin Tai Wu Rd., Hsichih,
Taipei Hsien 221, Taiwan, R.O.C.

Title: LED Bard/Power Button

Size: A3 | Document Number: Enrico/Caruso 15 HR | Rev: X01

Date: Thursday, June 02, 2011 | Sheet 68 of 104

Internal KeyBoard Connector

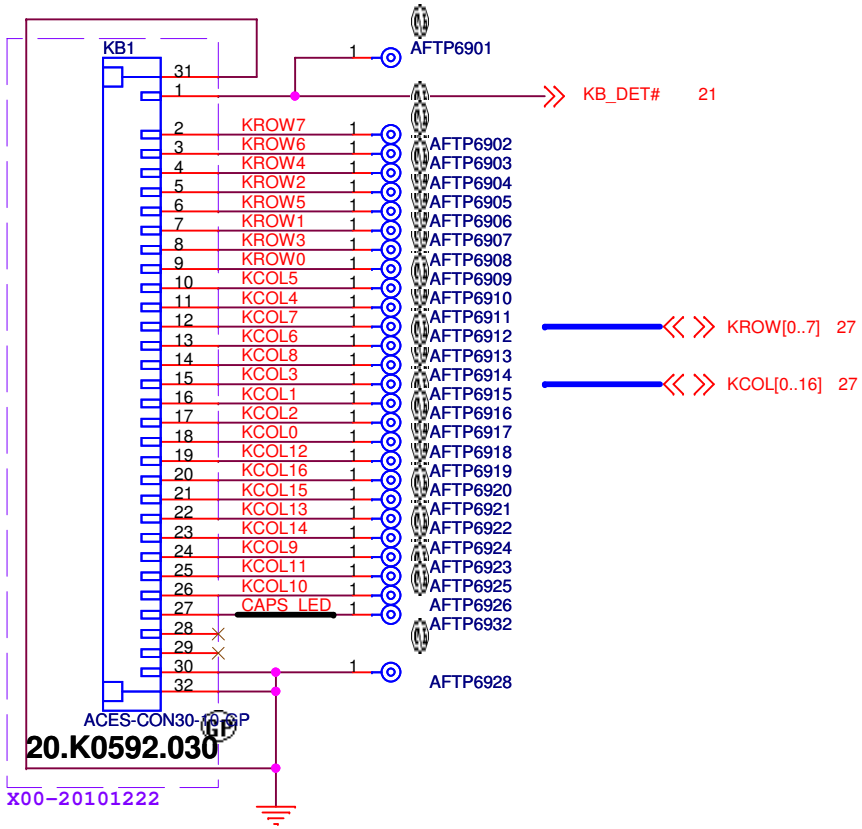

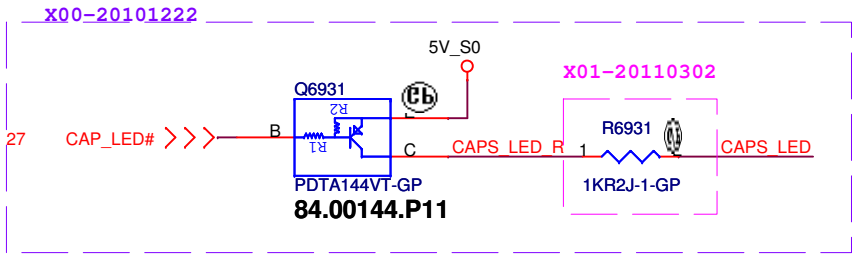

TouchPad Connector

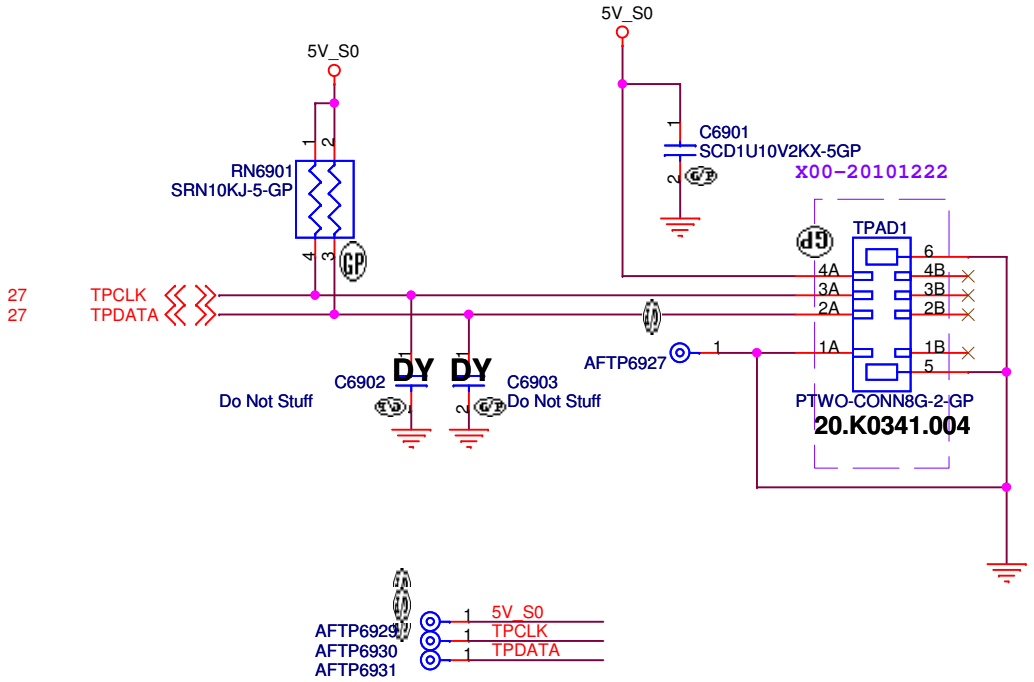

DV15 HR Vos GIGA HDMI NoSurge

Wistron Corporation
21F, 88, Sec.1, Hsin Tai Wu Rd., Hsichih,
Taipei Hsien 221, Taiwan, R.O.C.

Title: ***Key Board/Touch Pad***

Size: A4 | Document Number: **Enrico/Caruso 15 HR** | Rev: **X01**

Date: Thursday, June 02, 2011 | Sheet 69 of 104

DV15 HR Vos GIGA HDMI NoSurge

Wistron Corporation
21F, 88, Sec.1, Hsin Tai Wu Rd., Hsichih,
Taipei Hsien 221, Taiwan, R.O.C.

Title: *Hall Sensor*

Size	Document Number	Rev
A3	Enrico/Caruso 15 HR	X01

Date: Thursday, June 02, 2011 Sheet 70 of 104

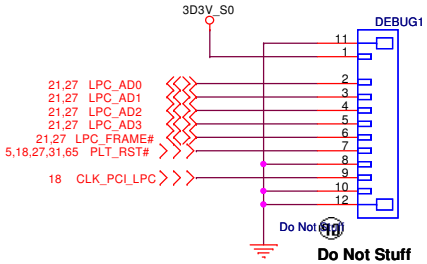

DV15 HR Vos GIGA HDMI NoSurge

Wistron Corporation
21F, 88, Sec.1, Hsin Tai Wu Rd., Hsichih,
Taipei Hsien 221, Taiwan, R.O.C.

Title: ***Dubug connector***

Size: A3 | Document Number: ***Enrico/Caruso 15 HR*** | Rev: ***X01***

Date: Thursday, June 02, 2011 | Sheet 71 of 104

(Blanking)

DV15 HR Vos GIGA HDMI NoSurge

Wistron Corporation
21F, 88, Sec.1, Hsin Tai Wu Rd., Hsichih,
Taipei Hsien 221, Taiwan, R.O.C.

Title	Reserved	
Size A3	Document Number Enrico/Caruso 15 HR	Rev X01
Date: Thursday, June 02, 2011	Sheet 72 of 104	

(Blanking)

DV15 HR Vos GIGA HDMI NoSurge

Wistron Corporation
21F, 88, Sec.1, Hsin Tai Wu Rd., Hsichih,
Taipei Hsien 221, Taiwan, R.O.C.

Title: Reserved

Size: A3 | Document Number: Enrico/Caruso 15 HR | Rev: X01

Date: Thursday, June 02, 2011 | Sheet 73 of 104

SSID = SDIO

SD/MMC/MS Card Reader

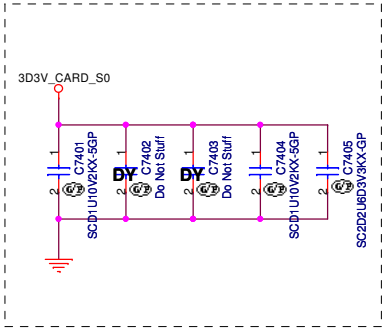

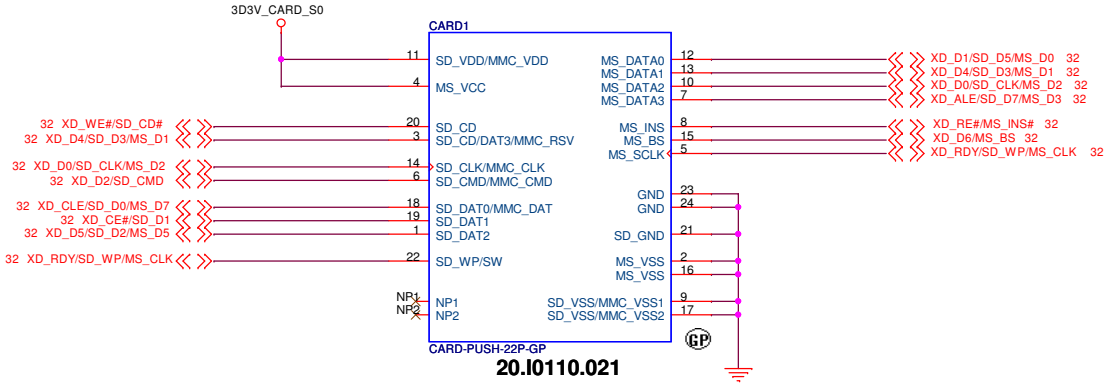

X01-20110315

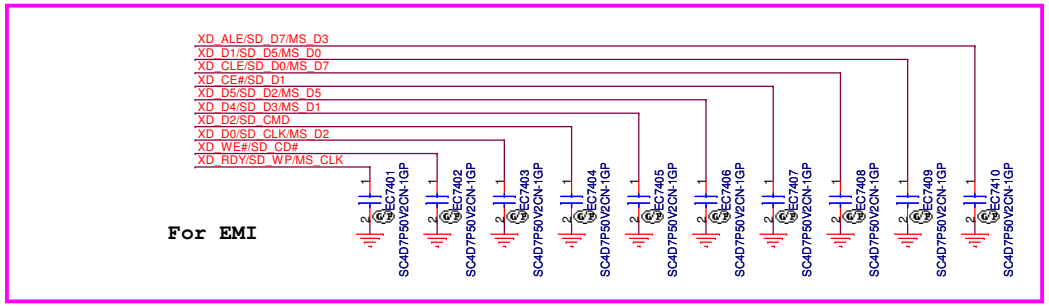

DV15 HR Vos GIGA HDMI NoSurge

Wistron Corporation
21F, 88, Sec.1, Hsin Tai Wu Rd., Hsichih,
Taipei Hsien 221, Taiwan, R.O.C.

Title: SD/MS/MMC Card CONN

Size: A3 | Document Number: Enrico/Caruso 15 HR | Rev: X01

Date: Thursday, June 02, 2011 | Sheet 74 of 104

SSID = ExpressCard

DV15 HR Vos GIGA HDMI NoSurge

Wistron Corporation
21F, 88, Sec.1, Hsin Tai Wu Rd., Hsichih,
Taipei Hsien 221, Taiwan, R.O.C.

Title: Express Card

Size: A3 | Document Number: Enrico/Caruso 15 HR | Rev: X01

Date: Thursday, June 02, 2011 | Sheet 75 of 104

(Blanking)

DV15 HR Vos GIGA HDMI NoSurge

Wistron Corporation
21F, 88, Sec.1, Hsin Tai Wu Rd., Hsichih,
Taipei Hsien 221, Taiwan, R.O.C.

Title: Reserved

Size: A3 | Document Number: Enrico/Caruso 15 HR | Rev: X01

Date: Thursday, June 02, 2011 | Sheet 76 of 104

(Blanking)

DV15 HR Vos GIGA HDMI NoSurge

Wistron Corporation
21F, 88, Sec.1, Hsin Tai Wu Rd., Hsichih,
Taipei Hsien 221, Taiwan, R.O.C.

Title: Reserved

Size: A3 | Document Number: Enrico/Caruso 15 HR | Rev: X01

Date: Thursday, June 02, 2011 | Sheet 77 of 104

(Blanking)

DV15 HR Vos GIGA HDMI NoSurge

Wistron Corporation
21F, 88, Sec.1, Hsin Tai Wu Rd., Hsichih,
Taipei Hsien 221, Taiwan, R.O.C.

Title	Reserved	
Size A3	Document Number Enrico/Caruso 15 HR	Rev X01
Date: Thursday, June 02, 2011	Sheet 78 of 104	

SSID = User.Interface

DV15 HR Vos GIGA HDMI NoSurge

Wistron Corporation
21F, 88, Sec.1, Hsin Tai Wu Rd., Hsichih,
Taipei Hsien 221, Taiwan, R.O.C.

Title: Free Fall Sensor

Size: A3 | Document Number: Enrico/Caruso 15 HR | Rev: X01

Date: Thursday, June 02, 2011 | Sheet 79 of 104

(Blanking)

DV15 HR Vos GIGA HDMI NoSurge

Wistron Corporation
21F, 88, Sec.1, Hsin Tai Wu Rd., Hsichih,
Taipei Hsien 221, Taiwan, R.O.C.

Title: Reserved

Size: A3 | Document Number: Enrico/Caruso 15 HR | Rev: X01

Date: Thursday, June 02, 2011 | Sheet 80 of 104

(Blanking)

DV15 HR Vos GIGA HDMI NoSurge

Wistron Corporation
21F, 88, Sec.1, Hsin Tai Wu Rd., Hsichih,
Taipei Hsien 221, Taiwan, R.O.C.

Title: Reserved

Size: A3 | Document Number: Enrico/Caruso 15 HR | Rev: X01

Date: Thursday, June 02, 2011 | Sheet 81 of 104

DV15 HR Vos GIGA HDMI NoSurge

Wistron Corporation
21F, 88, Sec.1, Hsin Tai Wu Rd., Hsichih,
Taipei Hsien 221, Taiwan, R.O.C.

Title: IO Board Connector

Size: A3 | Document Number: Enrico/Caruso 15 HR | Rev: X01

Date: Thursday, June 02, 2011 | Sheet 82 of 104

(Blanking)

DV15 HR Vos GIGA HDMI NoSurge

Wistron Corporation
21F, 88, Sec.1, Hsin Tai Wu Rd., Hsichih,
Taipei Hsien 221, Taiwan, R.O.C.

Title: GPU_PCIE/STRAPPING(1/5)

Size: A3 | Document Number: Enrico/Caruso 15 HR | Rev: X01

Date: Thursday, June 02, 2011 | Sheet 83 of 104

(Blanking)

DV15 HR Vos GIGA HDMI NoSurge

Wistron Corporation
21F, 88, Sec.1, Hsin Tai Wu Rd., Hsichih,
Taipei Hsien 221, Taiwan, R.O.C.

Title: GPU Memory(2/5)

Size	Document Number	Rev
Custom	Enrico/Caruso 15 HR	X01

Date: Thursday, June 02, 2011 Sheet 84 of 104

(Blanking)

DV15 HR Vos GIGA HDMI NoSurge

Wistron Corporation
21F, 88, Sec.1, Hsin Tai Wu Rd., Hsichih,
Taipei Hsien 221, Taiwan, R.O.C.

Title: GPU_DP/LVDS/CRT/GPIO(3/5)

Size	Document Number	Rev
A2	Enrico/Caruso 15 HR	X01

Date: Thursday, June 02, 2011 Sheet 85 of 104

(Blanking)

DV15 HR Vos GIGA HDMI NoSurge

Wistron Corporation
21F, 88, Sec.1, Hsin Tai Wu Rd., Hsichih,
Taipei Hsien 221, Taiwan, R.O.C.

Title: GPU_POWER(4/5)

Size: A2 | Document Number: Enrico/Caruso 15 HR | Rev: X01

Date: Thursday, June 02, 2011 | Sheet 86 of 104

(Blanking)

DV15 HR Vos GIGA HDMI NoSurge

Wistron Corporation
21F, 88, Sec.1, Hsin Tai Wu Rd., Hsichih,
Taipei Hsien 221, Taiwan, R.O.C.

Title: GPU_DPPWR/GND(5/5)

Size: A2 | Document Number: Enrico/Caruso 15 HR | Rev: X01

Date: Thursday, June 02, 2011 | Sheet 87 of 104

(Blanking)

DV15 HR Vos GIGA HDMI NoSurge

Wistron Corporation
21F, 88, Sec.1, Hsin Tai Wu Rd., Hsichih,
Taipei Hsien 221, Taiwan, R.O.C.

Title: GPU-VRAM1,2 (1/4)

Size: Custom | Document Number: Enrico/Caruso 15 HR | Rev: X01

Date: Thursday, June 02, 2011 | Sheet 88 of 104

(Blanking)

DV15 HR Vos GIGA HDMI NoSurge

Wistron Corporation
21F, 88, Sec.1, Hsin Tai Wu Rd., Hsichih,
Taipei Hsien 221, Taiwan, R.O.C.

Title: GPU-VRAM3,4 (2/4)

Size: Custom | Document Number: Enrico/Caruso 15 HR | Rev: X01

Date: Thursday, June 02, 2011 | Sheet 89 of 104

(Blanking)

DV15 HR Vos GIGA HDMI NoSurge

Wistron Corporation
21F, 88, Sec.1, Hsin Tai Wu Rd., Hsichih,
Taipei Hsien 221, Taiwan, R.O.C.

Title: GPU-VRAM5,6 (3/4)

Size: A3 | Document Number: Enrico/Caruso 15 HR | Rev: X01

Date: Thursday, June 02, 2011 | Sheet 90 of 104

(Blanking)

DV15 HR Vos GIGA HDMI NoSurge

Wistron Corporation
21F, 88, Sec.1, Hsin Tai Wu Rd., Hsichih,
Taipei Hsien 221, Taiwan, R.O.C.

Title: GPU-VRAM7,8 (4/4)

Size: A3 | Document Number: Enrico/Caruso 15 HR | Rev: X01

Date: Thursday, June 02, 2011 | Sheet 91 of 104

(Blanking)

DV15 HR Vos GIGA HDMI NoSurge

Wistron Corporation
21F, 88, Sec.1, Hsin Tai Wu Rd., Hsichih,
Taipei Hsien 221, Taiwan, R.O.C.

Title: RT8208B_+VGA_CORE

Size: A3 | Document Number: Enrico/Caruso 15 HR | Rev: X01

Date: Thursday, June 02, 2011 | Sheet 92 of 104

(Blanking)

DV15 HR Vos GIGA HDMI NoSurge

Wistron Corporation
21F, 88, Sec.1, Hsin Tai Wu Rd., Hsichih,
Taipei Hsien 221, Taiwan, R.O.C.

Title: DISCRETE VGA POWER

Size: A2 | Document Number: Enrico/Caruso 15 HR | Rev: X01

Date: Thursday, June 02, 2011 | Sheet 93 of 104

(Blanking)

DV15 HR Vos GIGA HDMI NoSurge

Wistron Corporation
21F, 88, Sec.1, Hsin Tai Wu Rd., Hsichih,
Taipei Hsien 221, Taiwan, R.O.C.

Title: *LVDS_Switch*

Size: A3 | Document Number: Enrico/Caruso 15 HR | Rev: X01

Date: Thursday, June 02, 2011 | Sheet 94 of 104

(Blanking)

DV15 HR Vos GIGA HDMI NoSurge

Wistron Corporation
21F, 88, Sec.1, Hsin Tai Wu Rd., Hsichih,
Taipei Hsien 221, Taiwan, R.O.C.

Title: *CRT_Switch*

Size: A3 | Document Number: Enrico/Caruso 15 HR | Rev: X01

Date: Thursday, June 02, 2011 | Sheet 95 of 104

SSID = SDIO

(Blanking)

DV15 HR Vos GIGA HDMI NoSurge

Wistron Corporation
21F, 88, Sec.1, Hsin Tai Wu Rd., Hsichih,
Taipei Hsien 221, Taiwan, R.O.C.

Title: TOUCH PANEL

Size: A3 | Document Number: Enrico/Caruso 15 HR | Rev: X01

Date: Thursday, June 02, 2011 | Sheet 96 of 104

SSID = Mechanical

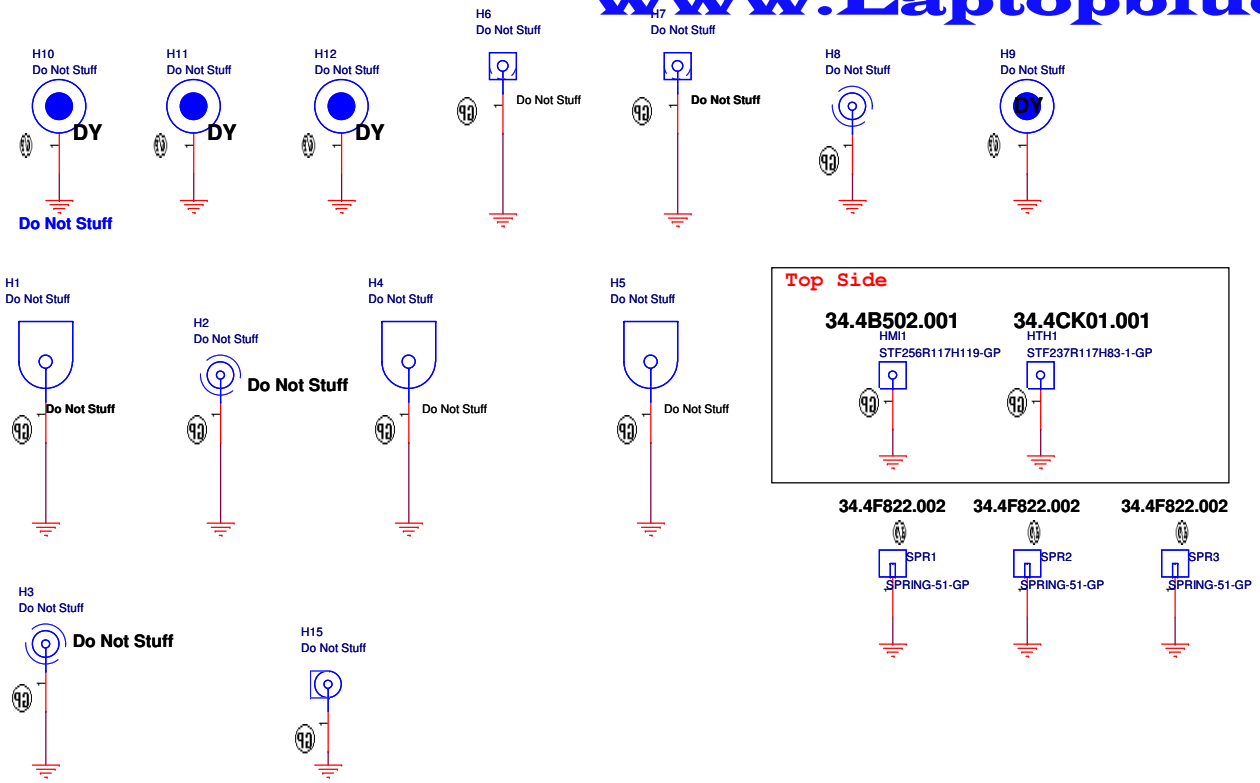

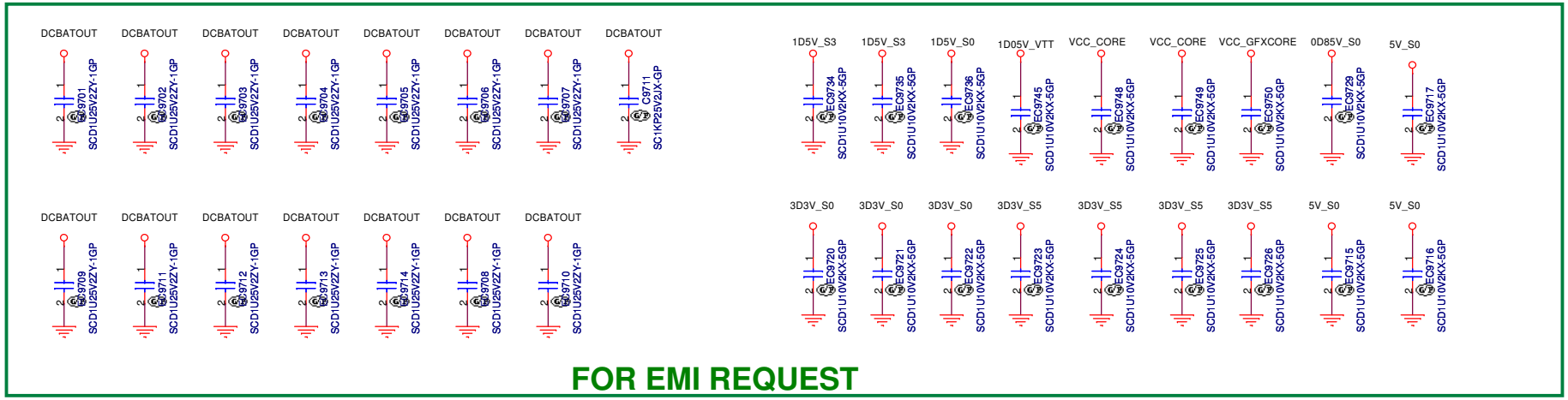

FOR EMI REQUEST

DV15 HR Vos GIGA HDMI NoSurge

Wistron Corporation
21F, 88, Sec.1, Hsin Tai Wu Rd., Hsichih,
Taipei Hsien 221, Taiwan, R.O.C.

Title: *UNUSED PARTS/EMI Capacitors*

Size	Document Number	Rev
A3	Enrico/Caruso 15 HR	X01

Date: Thursday, June 02, 2011 Sheet 97 of 104

Huron River Platform Power Sequence

(AC mode)

red word: KBC GPIO

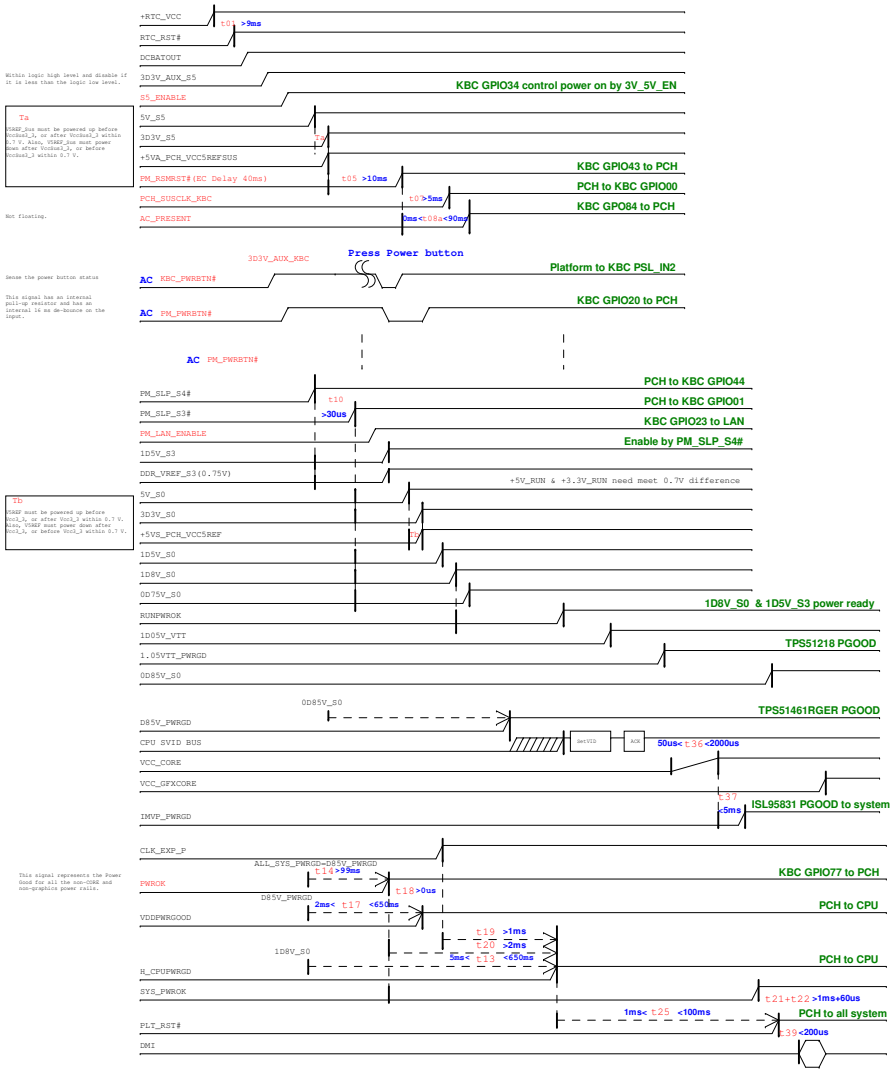

(DC mode)

red word: KBC GPIO

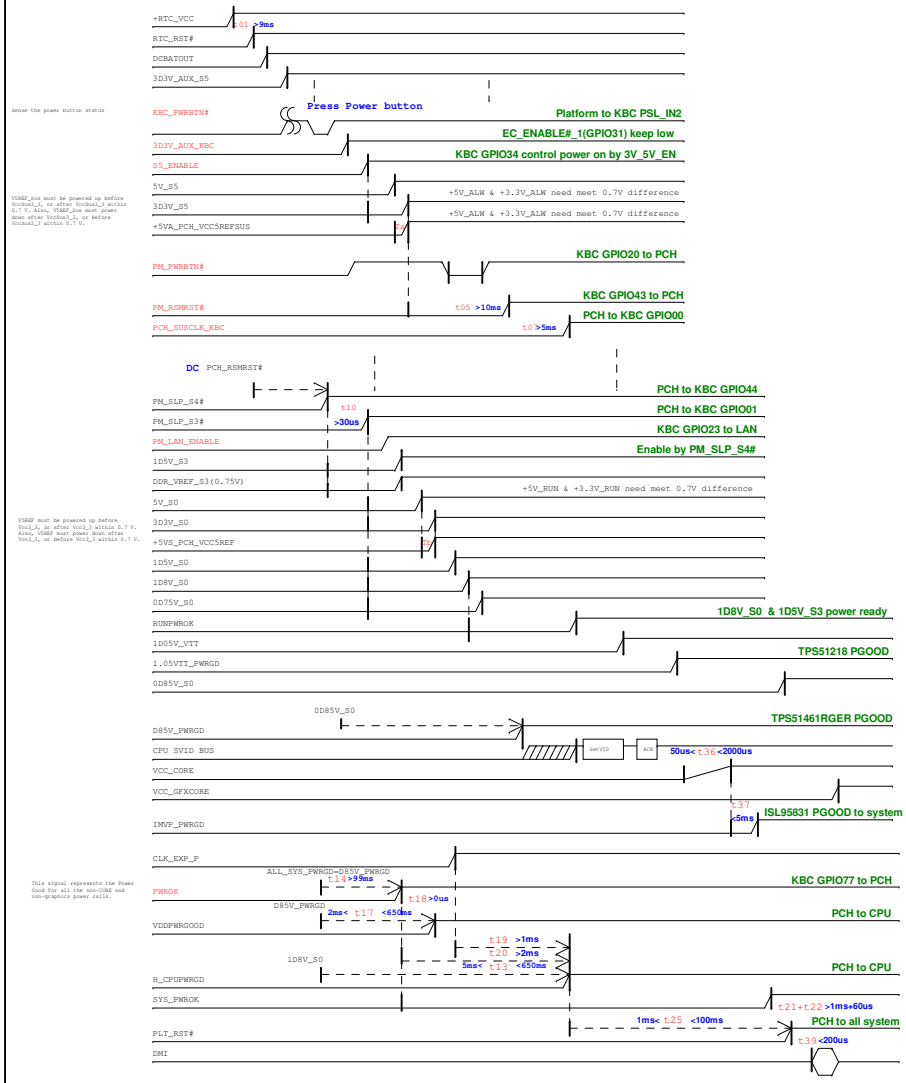

DV15 HR Vga GX0A HDMI NoSurge

Wistron Corporation
21F, 88, Sec.1, Hsin Tai Wu Rd., Hsichih,
Taipei Hsien 221, Taiwan, R.O.C.

Size: A1	Document Number: Enrico/Caruso 15 HR	Rev: X01
Date: Thursday, June 02, 2011	Sheet 98 of 104	

Wistron HURON RIVER POWER UP SEQUENCE DIAGRAM

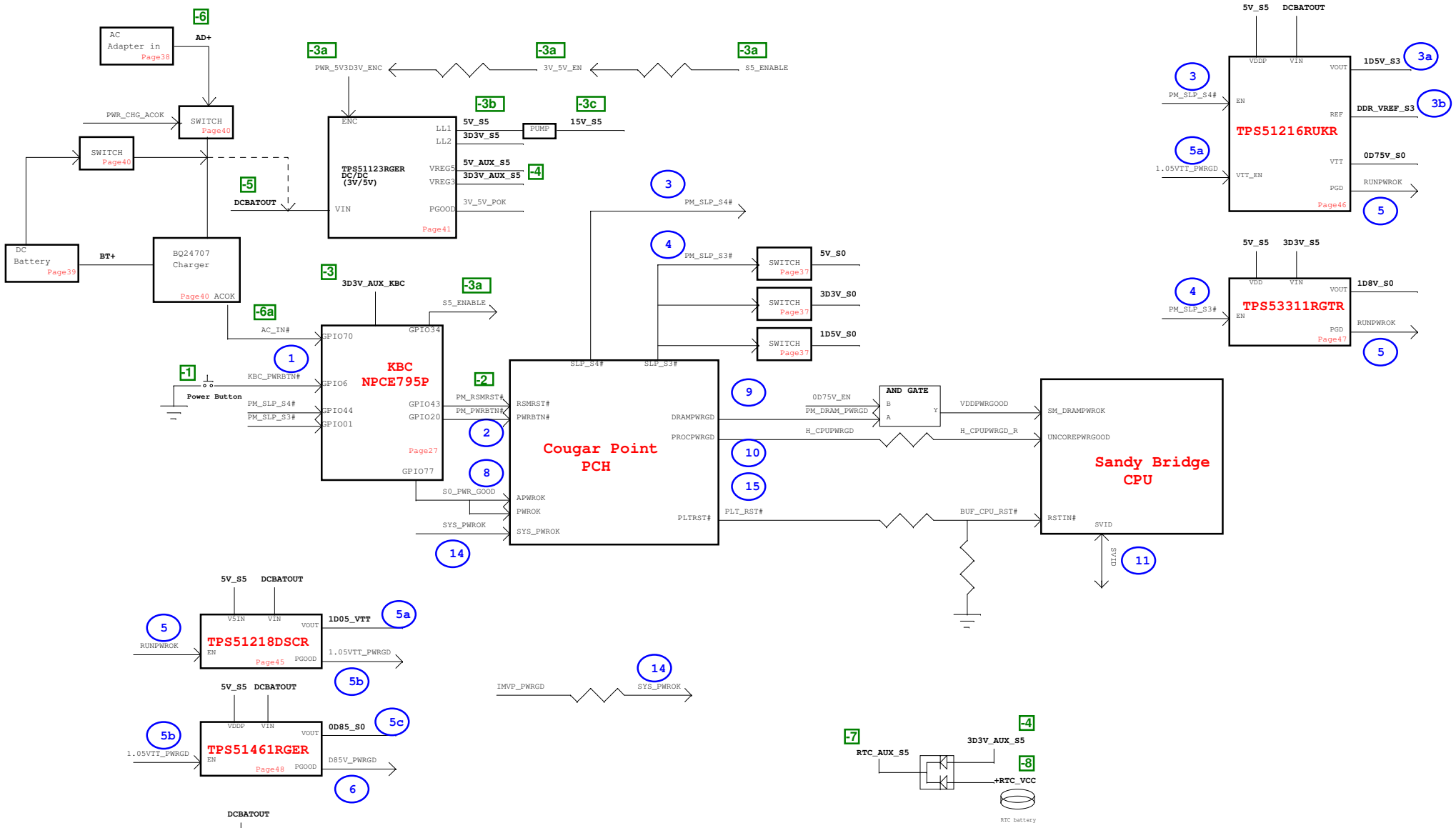

Power Up Sequence: -8 ~ 15

DV15 HR Vos GIGA HDMI NoSurge

Wistron Corporation
21F, 88, Sec.1, Hsin Tai Wu Rd., Hsichih, Taipei Hsien 221, Taiwan, R.O.C.

Title: Power Sequence Diagram

Size	Document Number	Rev
A2	Enrico/Caruso 15 HR	X01

Date: Thursday, June 02, 2011 Sheet 89 of 104

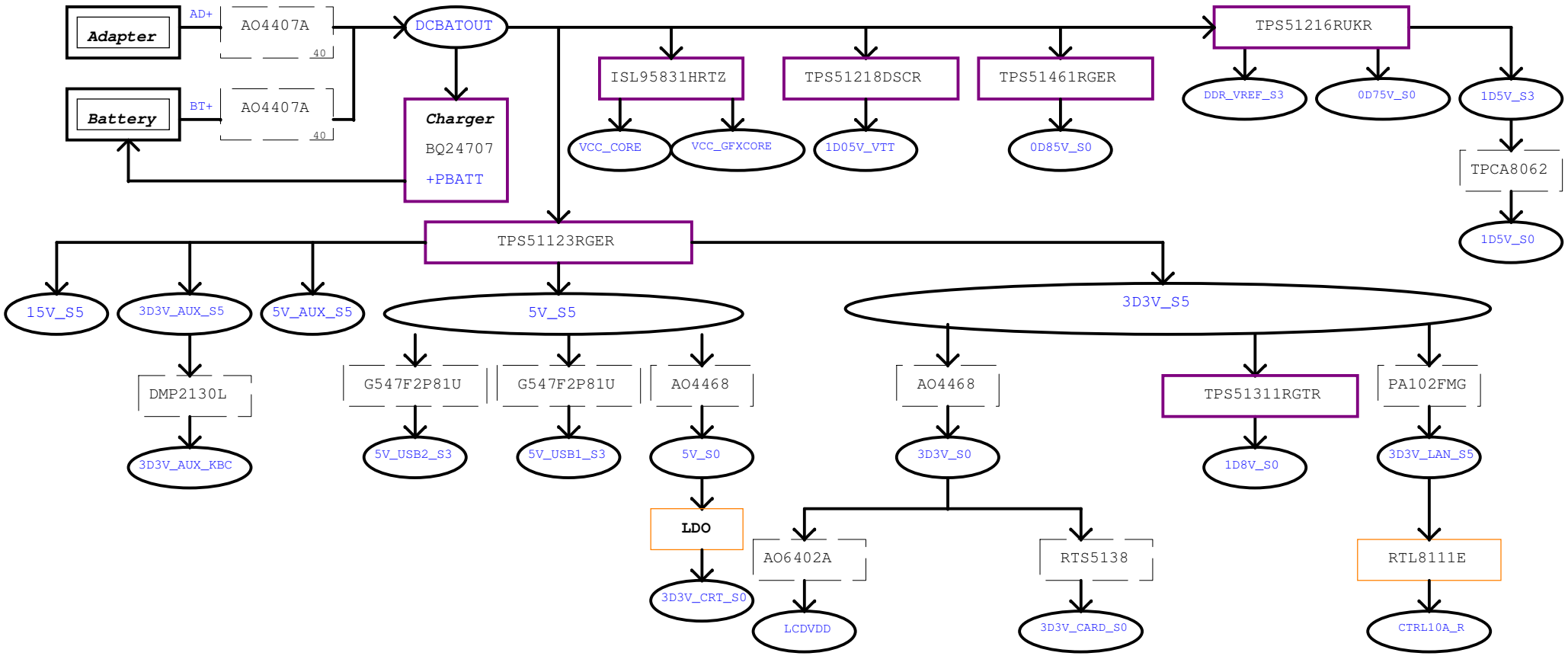

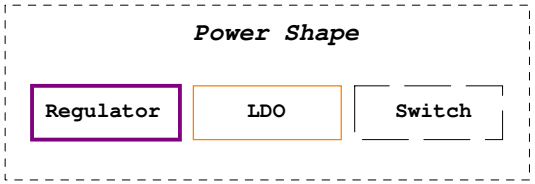

DV15 HR Vos GIGA HDMI NoSurge

Wistron Corporation
21F, 88, Sec.1, Hsin Tai Wu Rd., Hsichih,
Taipei Hsien 221, Taiwan, R.O.C.

Title: Power Block Diagram

Size: A3 | Document Number: Enrico/Caruso 15 HR | Rev: X01

Date: Thursday, June 02, 2011 | Sheet 100 of 104

PCH SMBus Block Diagram

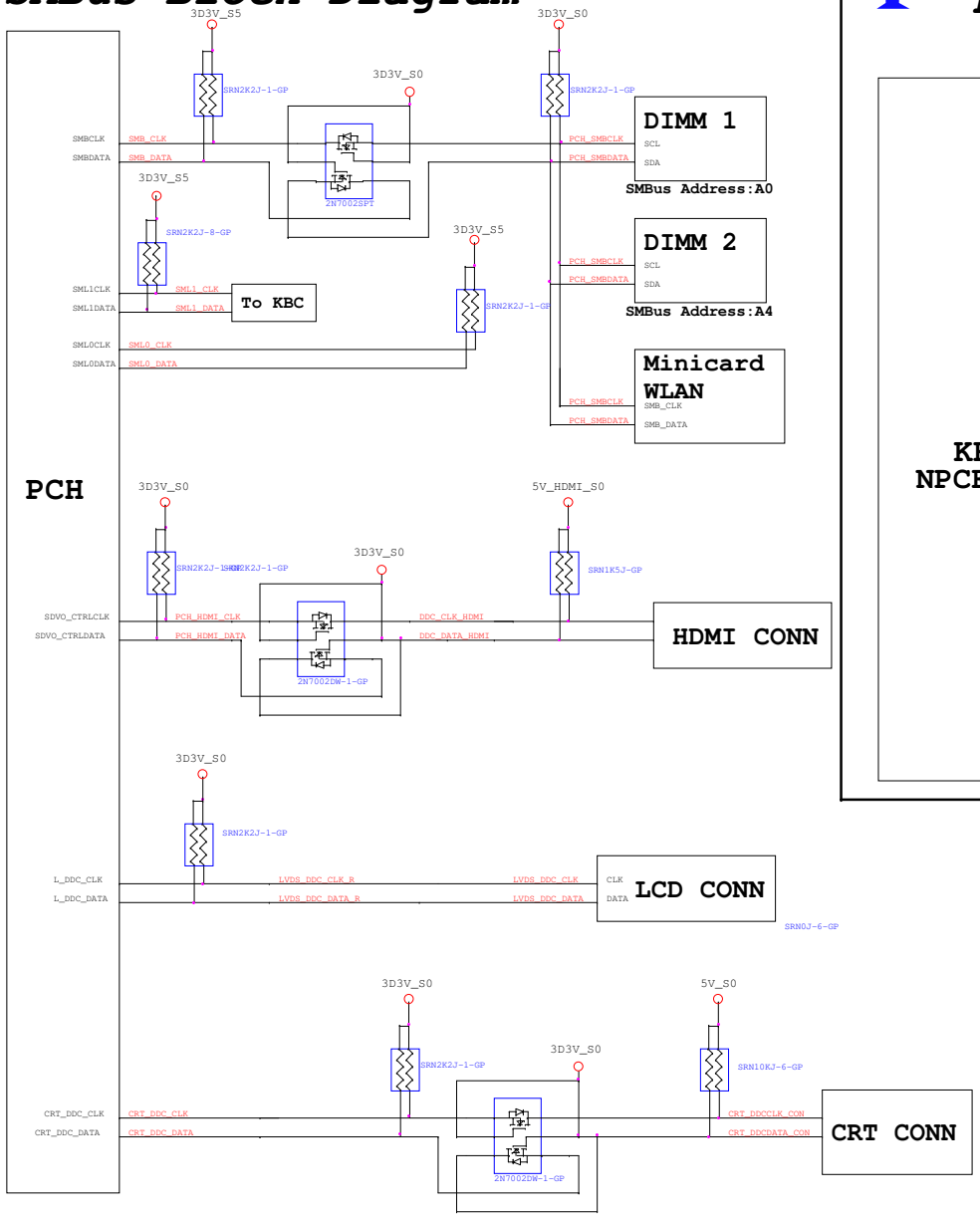

KBC SMBus Block Diagram

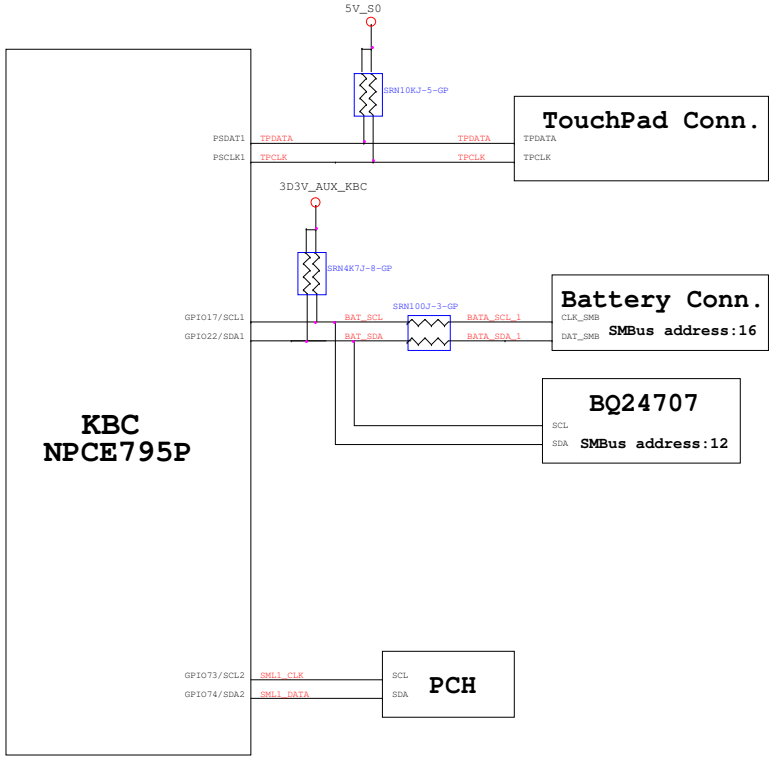

DV15 HR Vos GIGA HDMI NoSurge

Wistron Corporation
21F, 88, Sec.1, Hsin Tai Wu Rd., Hsichih,
Taipei Hsien 221, Taiwan, R.O.C.

Title: SMBUS Block Diagram

Size: A2 | Document Number: Enrico/Caruso 15 HR | Rev: X01

Date: Thursday, June 02, 2011 | Sheet 101 of 104

Thermal Block Diagram

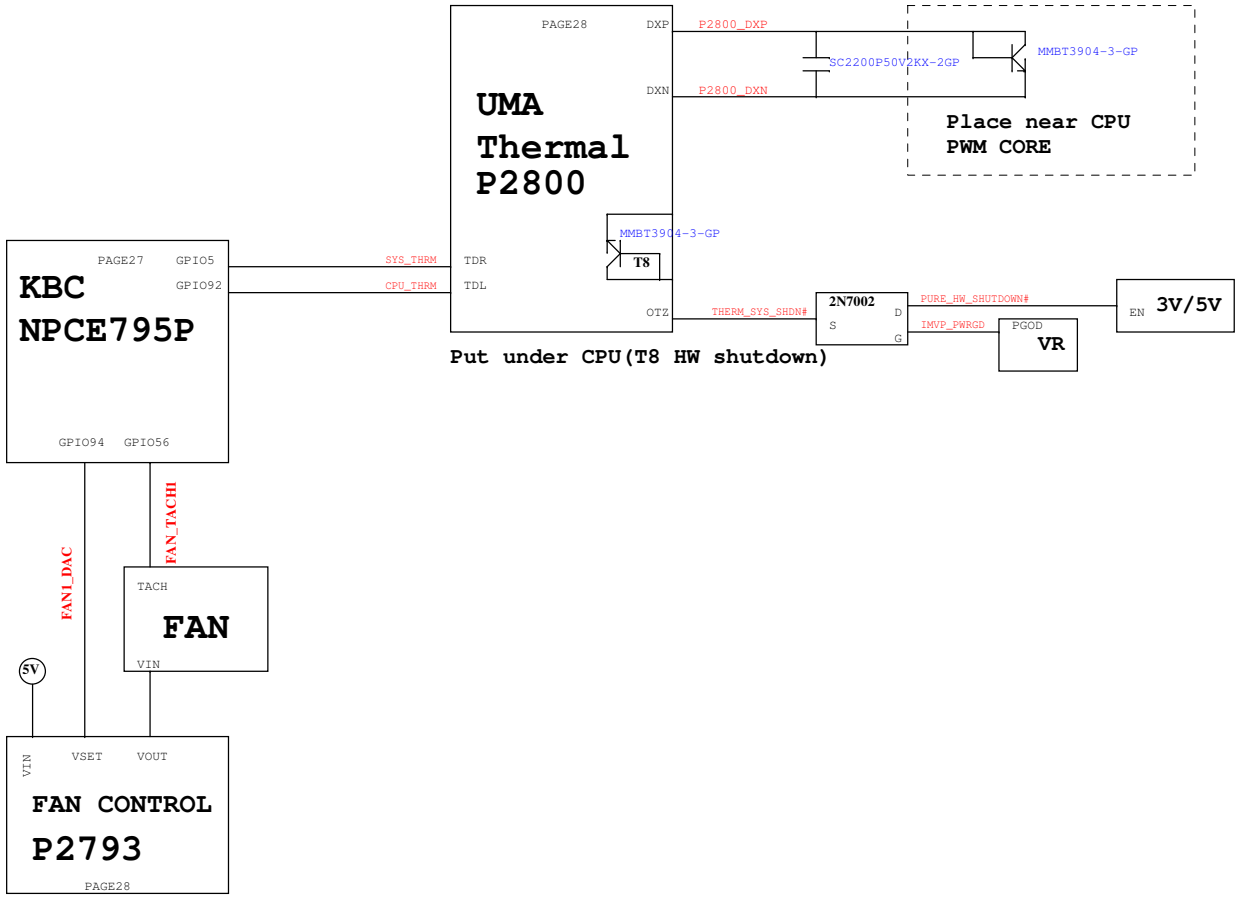

Audio Block Diagram

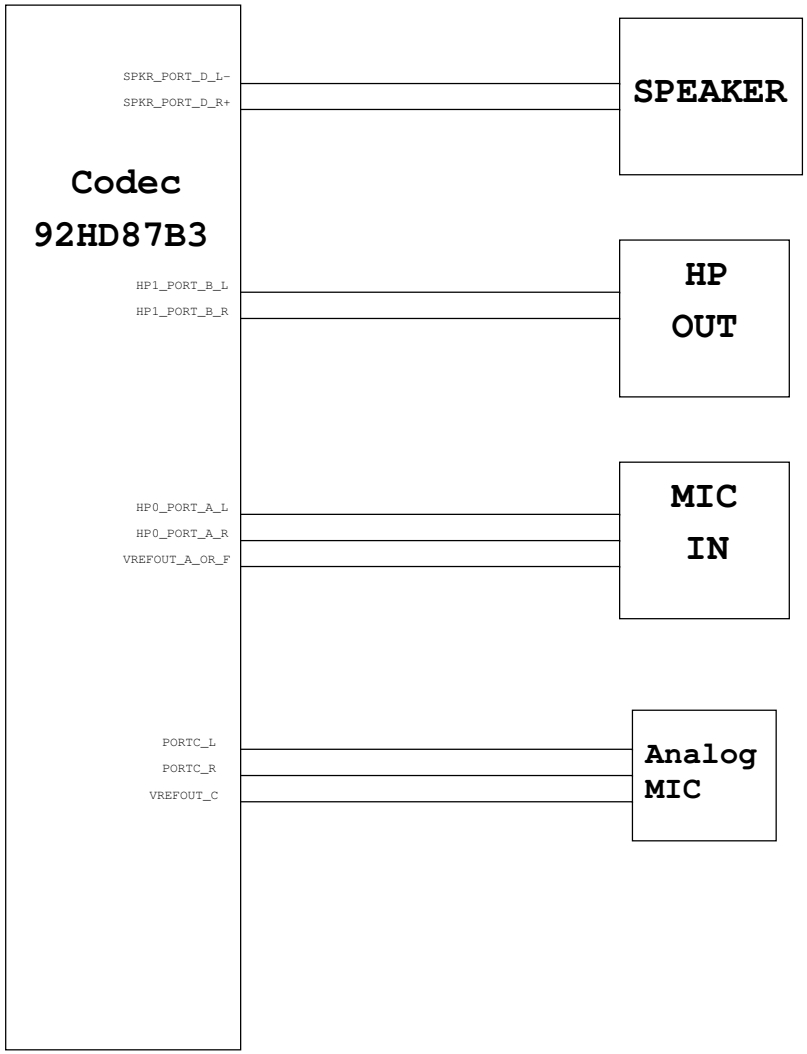

DV15 HR Vos GIGA HDMI NoSurge

Wistron Corporation
21F, 88, Sec.1, Hsin Tai Wu Rd., Hsichih,
Taipei Hsien 221, Taiwan, R.O.C.

Title: *Thermal/Audio Block Diagram*

Size: Custom | Document Number: *Enrico/Caruso 15 HR* | Rev: *X01*

Date: Thursday, June 02, 2011 | Sheet 102 of 104

DATA	PAGE	Change Item	Version
11/01	2	Modify Block Diagram for HDMI,LAN,CAMERA and fine tune location	X00
11/01	23	Add 5V_S0 to 3D3V_S0 LDO to prevent CRT ripple issue (水波紋)	X00
11/01	28	Take G709 to Co-layout with P2800	X00
11/01	100	Modify Power Block Diagram for fine tune USB Power location and lan power netname	X00
11/01	101	Modify SMBus Block Diagram for fine tune HDMI,CRT,LCD Block location	X00
11/02	18	Remove NV_RCOMP and NV_ALE netname	X00
11/02	22	Modify TP2206,TP2207,TP2208,TP2209 to BH47, C48, BH3 and C2	X00
11/02	20	PEG_CLKREQ#_R pull up to 3D3V_S5 and DY R2005	X00
11/03	20	Remove R2010,R2011,R2012,R2013	X00
11/03	20	RN2002 external Pull up resistor to 3D3V_S5 for PCIE_CLK_RQ0#, PCIE_CLK_RQ4#,PCIE_CLK_RQ7#,PEG_CLKREQ#_R	X00
11/03	21	change R2109 to 0 Ohm	X00
11/03	27	change R2736 to 0 Ohm	X00
11/04	19	change R1909(100k) to 10k	X00
11/04	22	change R2202(100k) to 10k	X00
11/04	50	Dummy U5001, U5002, R5031, R5001 and R5004. Stuff resistros 33 Ohm	X00
11/04	27	Change R2724(100k) to 10k	X00
11/04	27	Change R2710(47k) to 33k	X00

DATA	PAGE	Change Item	Version
			X00
			X00
			X00
			X00
			X00
			X00
			X00
			X00
			X00
			X00
			X00
			X00
			X00
			X00
			X00
			X00

DV15 HR Vos GIGA HDMI NoSurge

Wistron Corporation
21F, 88, Sec.1, Hsin Tai Wu Rd., Hsichih,
Taipei Hsien 221, Taiwan, R.O.C.

Title: Change History

Size: A3 | Document Number: Enrico/Caruso 15 HR | Rev: X01

Date: Thursday, June 02, 2011 | Sheet 103 of 104

DATA	PAGE	Change Item	Version

DATA	PAGE	Change Item	Version

DV15 HR Vos GIGA HDMI NoSurge

Wistron Corporation
21F, 88, Sec.1, Hsin Tai Wu Rd., Hsichih,
Taipei Hsien 221, Taiwan, R.O.C.

Title: *Change History*

Size: A3 | Document Number: *Enrico/Caruso 15 HR* | Rev: *X01*

Date: Thursday, June 02, 2011 | Sheet 104 of 104